SERVICEANLEITUNG

Service Manual. Manuel de Service. Manuale di Servizio.
Instrucciones de servicio. Service-instructies.

L 2100
230-90432.974

Xelos A 20

Xelos A 20
Art.-Nr. 65411

Mimo L 20
Art.-Nr. 65410

Mimo L 20

LOEWE.

XELOS A 20

MIMO L 20

TABLE OF CONTENTS

CHAPTER	DESCRIPTION
1-1	How to open the Cabinet
1-2	Exploded view
2	Troubleshooting
3-1	Wiring/Connection plan
3-2	Block-diagram
4	Power / Inverter Unit
5	Schematics
6	Layouts

CABINET AND MECHANICAL PARTS

NO.	PARTS NAME	MAT	Q'ty
1	COVER FRONT	PC_	1
2	COVER REAR	PC_	1
3	SPEAKER HOLDER	PC_	1
4	LCD MODULE	-	1
5	BRACKET SIDE PORT	PC_	1
6	INSERT HOLDER	PE	6
7	POWER KNOB	PC_	1
8	BRACKET LCD	EGI	1
9	BRACKET MAIN PORT	EGI	1
10	BRACKET SHAFT	EGI	1
11	CONTROL HOLDER	PC_	1
12	CABLE HOLDER	PE	1
13	STAND	AL	1

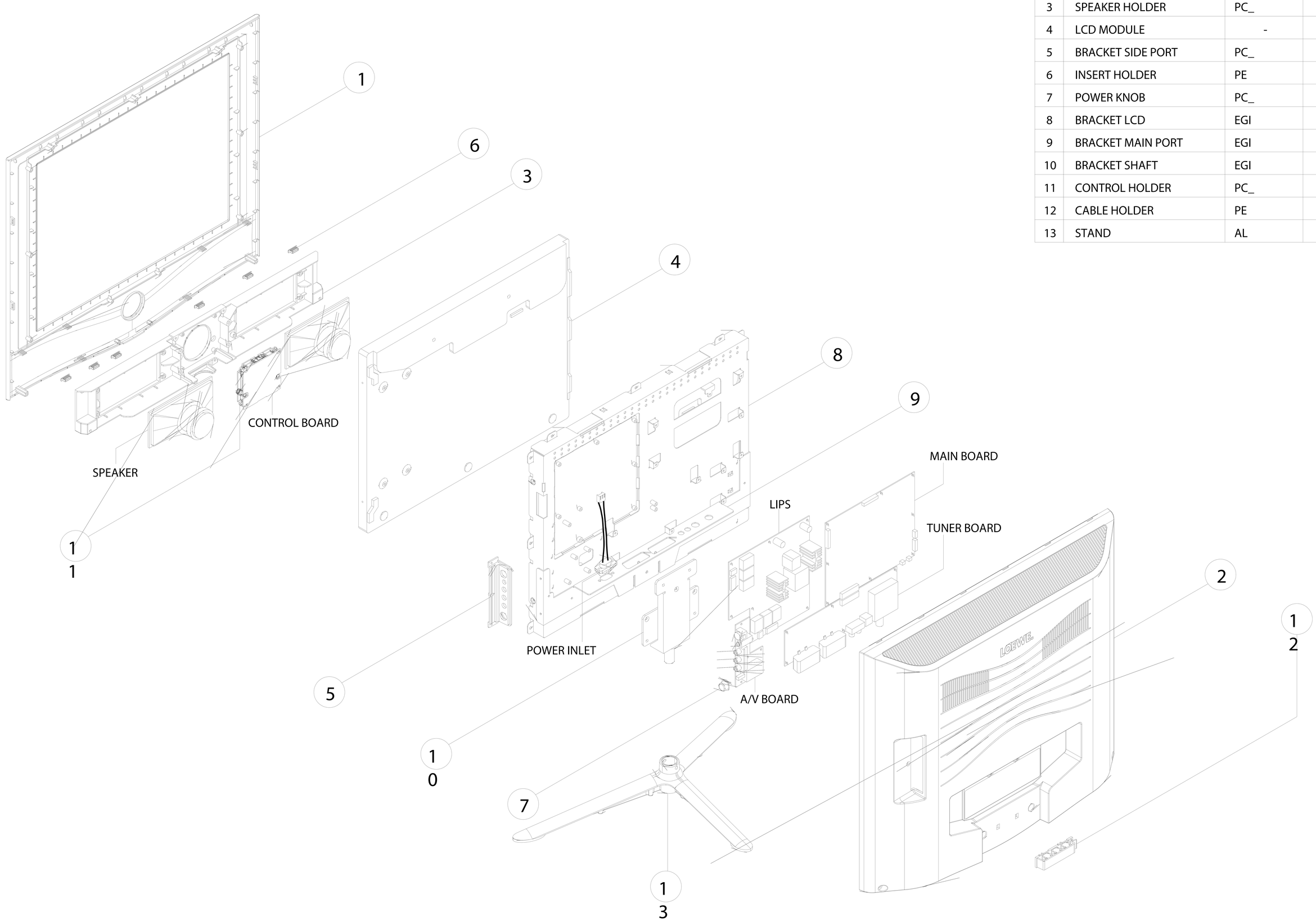

how to open the rear cover

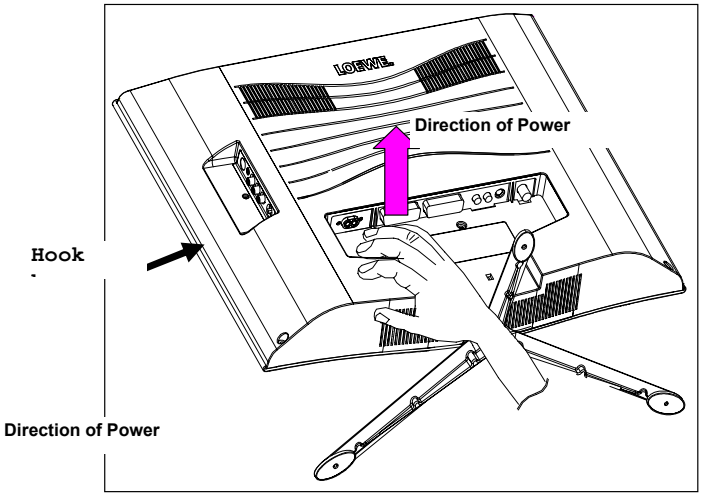

1. Lift rear cover by right hand as picture

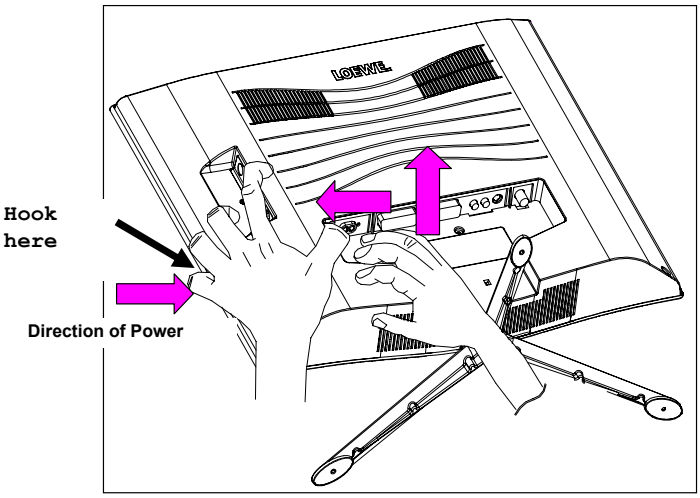

1. Grap in force the part of hook position on front cover and cable outgoing area on rear cover.
2. Unlock hook
3. Lift rear cover

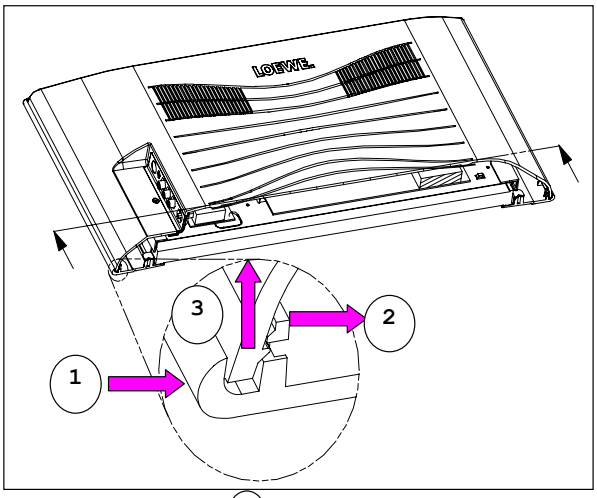

Press front cover 1
Hook move to inside diredti 2
Rear Cover move to upward 3

CABINET AND MECHANICAL PARTS

NO.	PARTS NAME	MAT	Q'ty
1	COVER FRONT	PC_	1
2	COVER REAR	PC_	1
3	SPEAKER HOLDER	PC_	1
4	LCD MODULE	-	1
5	BRACKET SIDE PORT	PC_	1
6	INSERT HOLDER	PE	6
7	POWER KNOB	PC_	1
8	BRACKET LCD	EGI	1
9	BRACKET MAIN PORT	EGI	1
10	BRACKET SHAFT	EGI	1
11	CONTROL HOLDER	PC_	1
12	CABLE HOLDER	PE	1
13	STAND	AL	1

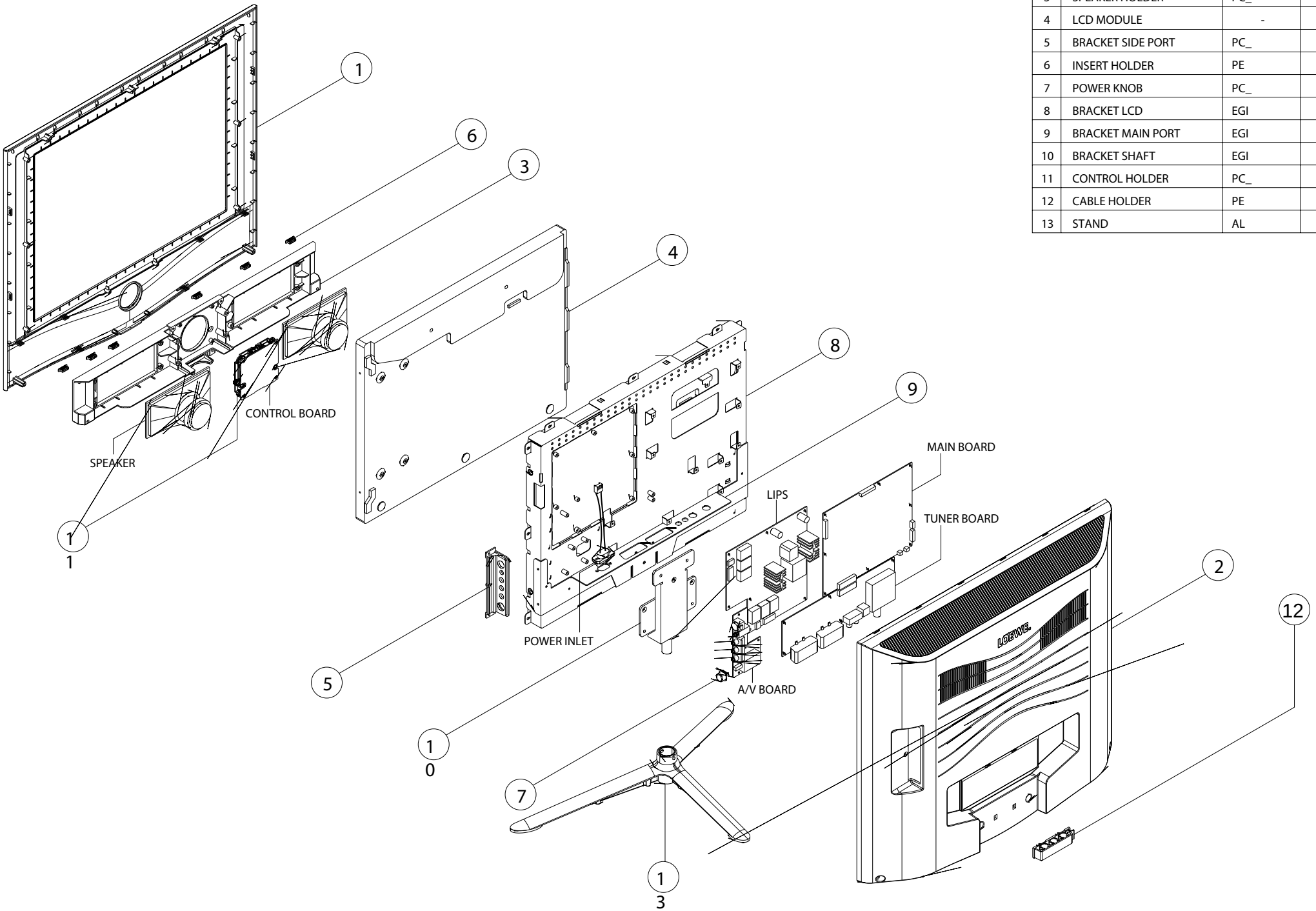

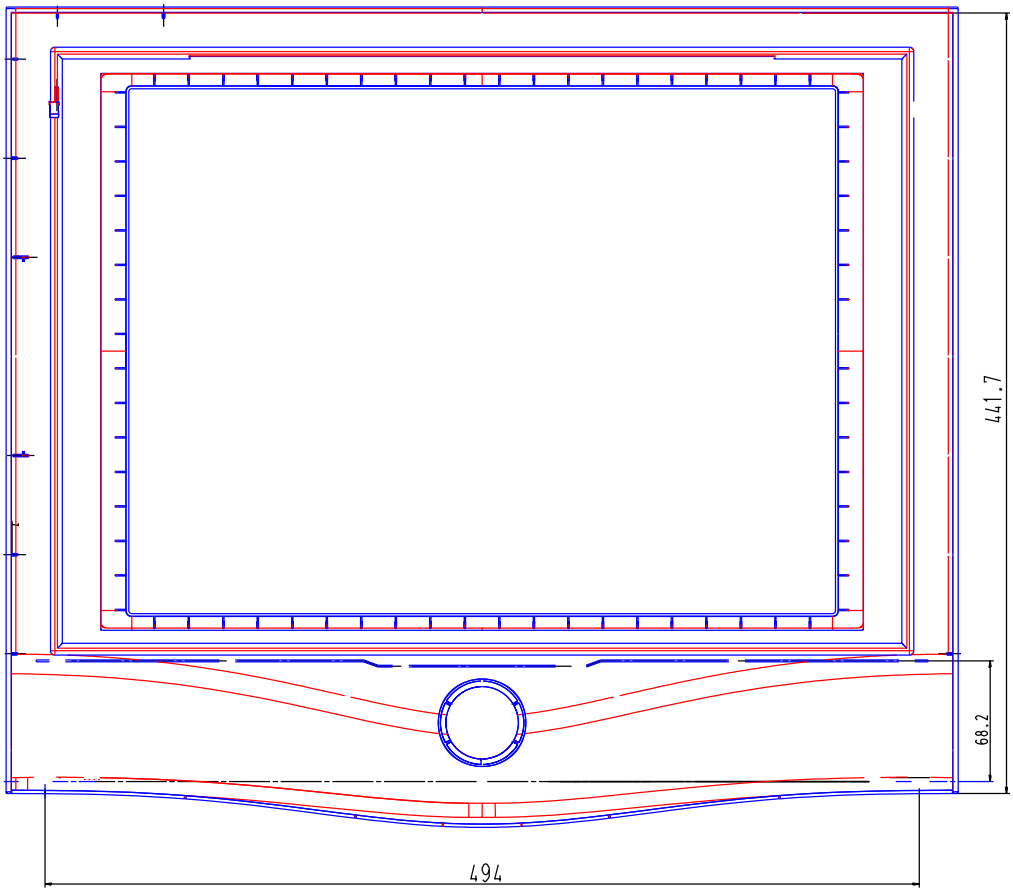
441.7
68.2
494

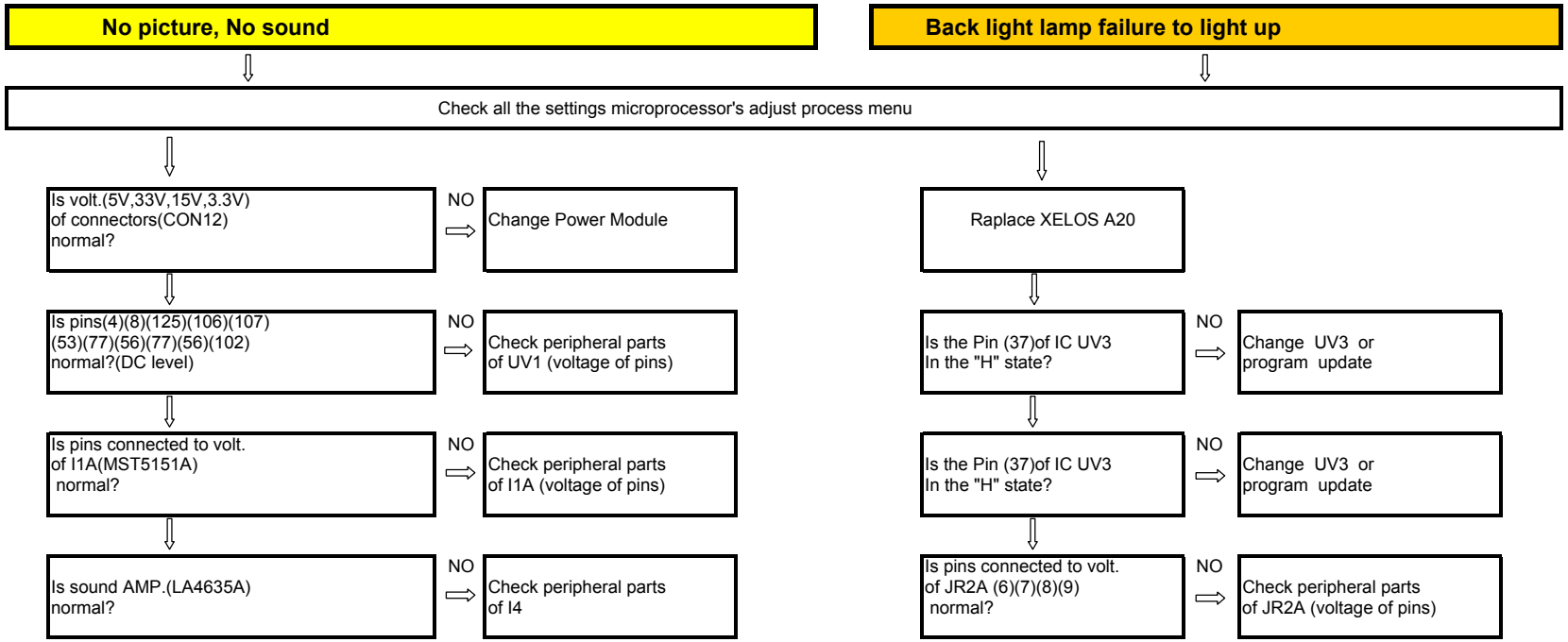
No picture, No sound
Back light lamp failure to light up
Check all the settings microprocessor's adjust process menu
Is volt.(5V,33V,15V,3.3V) of connectors(CON12) normal?
NO
Change Power Module
Is pins(4)(8)(125)(106)(107) (53)(77)(56)(77)(56)(102) normal?(DC level)
NO
Check peripheral parts of UV1 (voltage of pins)
Is pins connected to volt. of I1A(MST5151A) normal?
NO
Check peripheral parts of I1A (voltage of pins)
Is sound AMP.(LA4635A) normal?
NO
Check peripheral parts of I4
Raplace XELOS A20
Is the Pin (37)of IC UV3 In the "H" state?
NO
Change UV3 or program update
Is the Pin (37)of IC UV3 In the "H" state?
NO
Change UV3 or program update
Is pins connected to volt. of JR2A (6)(7)(8)(9) normal?
NO
Check peripheral parts of JR2A (voltage of pins)

No pictures (1)

No picture at all

No TV and S-vide out

No TV Output

No VIDEO2 output

Check all the settings microprocessor's adjust process menu

Is in/output of UV1(VCT 49XYI) normal ?
NO ⟹ Check UV1 & its peripherals.

Is in/output of I1A(MST 5151A) normal ?
NO ⟹ Check IA1 and its peripheral parts.

Check LCD pannel volt. & waveform

Is in/output of UV1(VCT 49XYI) normal ?
NO ⟹ Check UV1 and its peripheral parts.

Is input at pin(62),(63) of UV1 normal?
NO ⟹ Is SAWFILTER (U4) normal?

Is the pins of (102,110) (112) of UV1 normals?
NO ⟹ Check UV1 and its peripheral parts.

Is in/output of U4 normal?
NO ⟹ Check U4 and its peripheral parts.

Is the pins (65,64)of UV 1 at "CVBS - IN and "C-IN "."TV-OUT" is normal?
NO ⟹ Check peripheral parts?

No Pictures (2)

No VIDEO1 Output

No S-VIDEO Output

Check all the settings microprocessor's adjust process menu

Is pins(67,68,69,70) of UV1 at "RGB" and (66) of UV1 at "CVBS_IN", (59) of UV1 at "TV-OUT" is normal?

NO ⇨

Check peripheral parts.

Is the pin(60) of UV1 is normal?

NO ⇨

Check peripheral parts?

No Pitures (3)

No picture image inversion

Gradation defect

Check all the settings microprocessor's adjust process menu

Is Tuner normal ? voltage of pin(1) and pin(9).

⇨ Check peripherals or replace new tuner

Is the sawfilter(U4) normal ?

⇨ Check peripheral parts.

Is the pins(139,140, 141) of UV1 is normal ?

⇨ Check RV4 ,RV5 ,RV6 and peripheral parts.

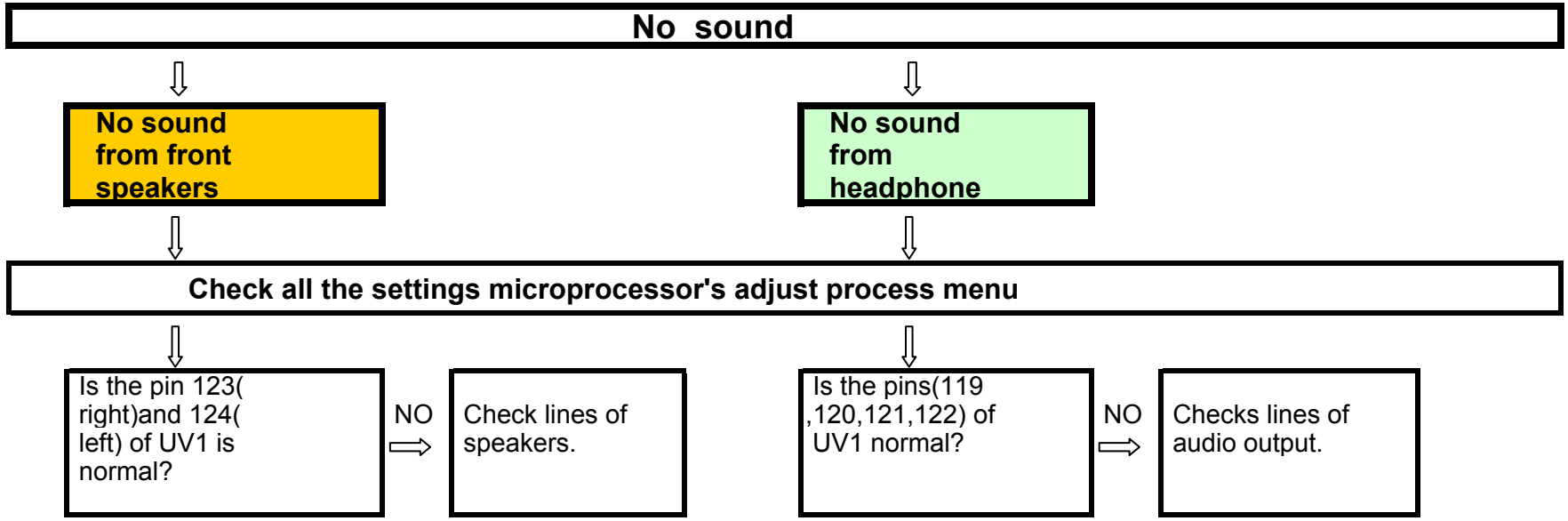
No sound
No sound from front speakers
No sound from headphone
Check all the settings microprocessor's adjust process menu
Is the pin 123(right)and 124(left) of UV1 is normal?
NO
Check lines of speakers.
Is the pins(119 ,120,121,122) of UV1 normal?
NO
Checks lines of audio output.

SYSTEM CHECK (POWER CHECK)

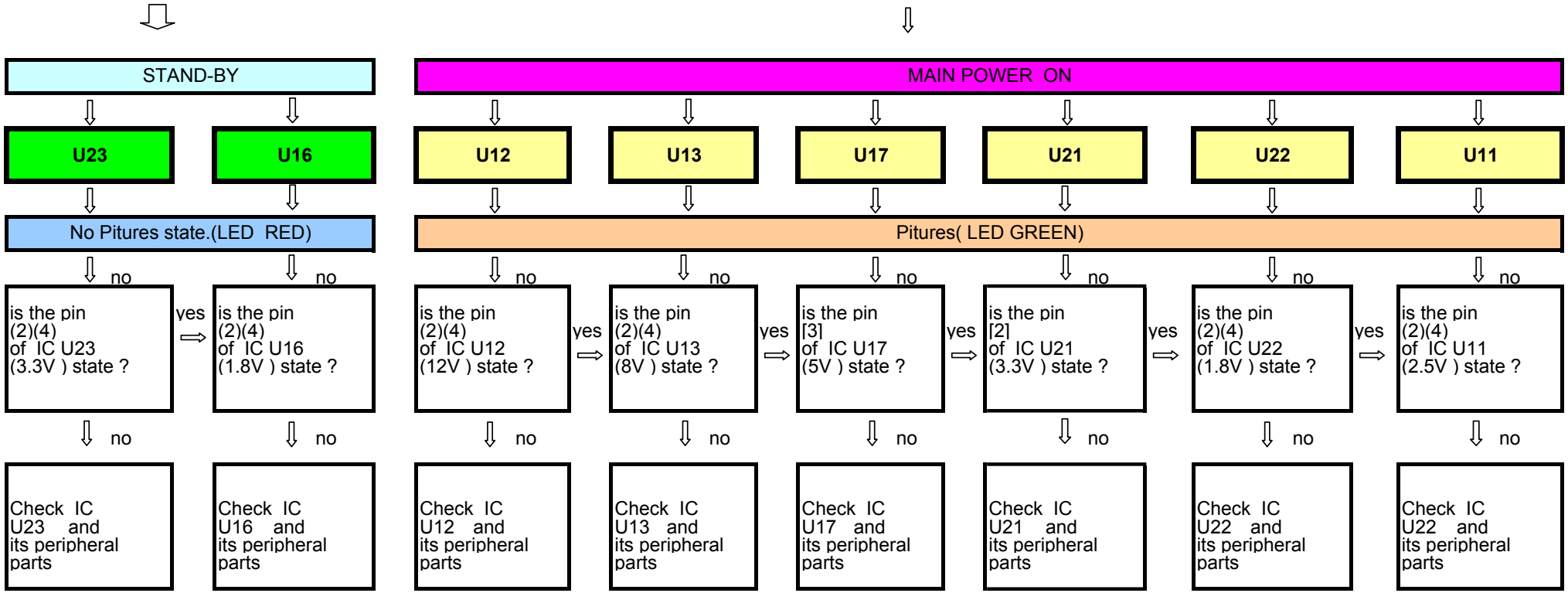

Connection and Cables 20" Kit Spezification

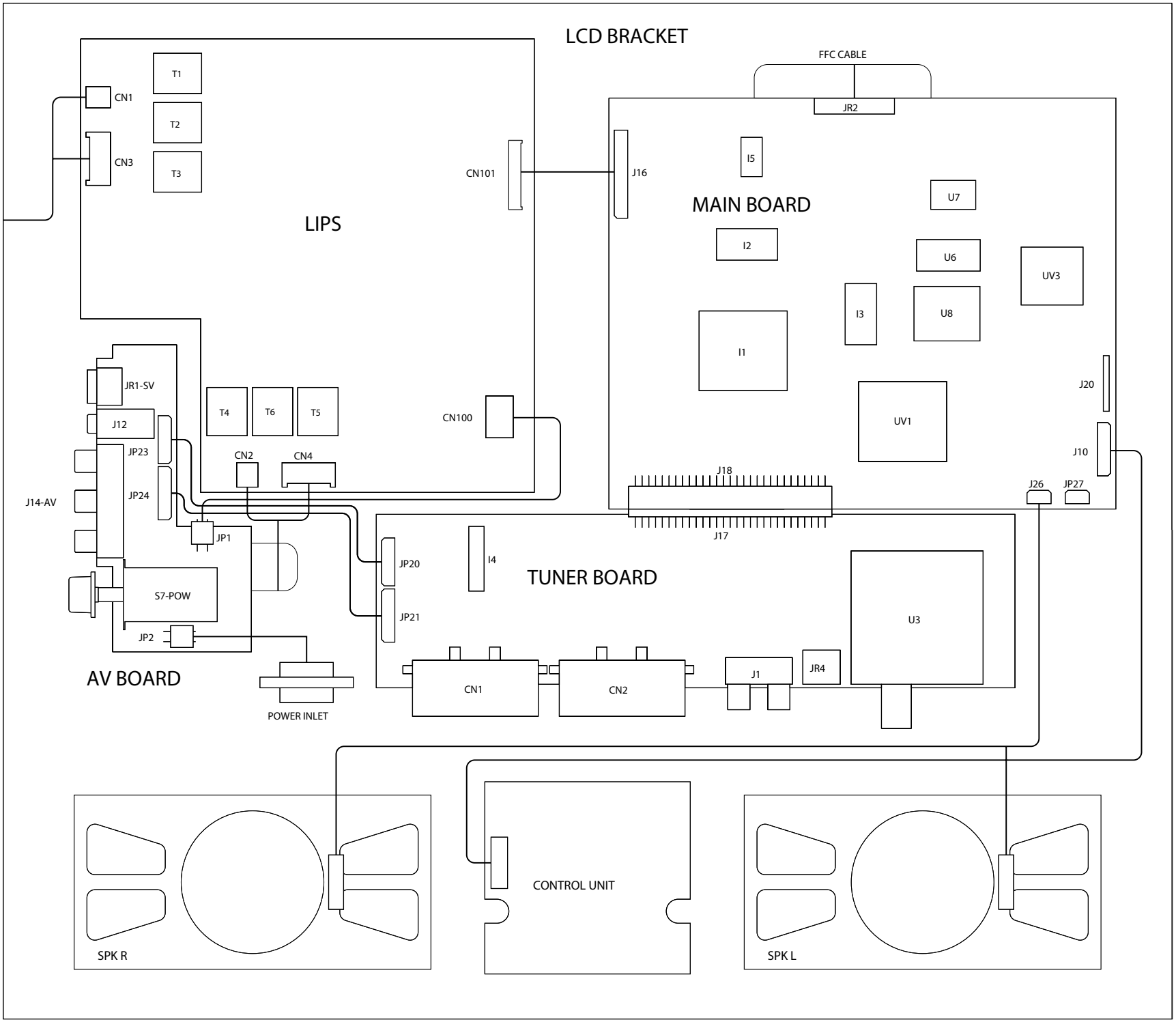

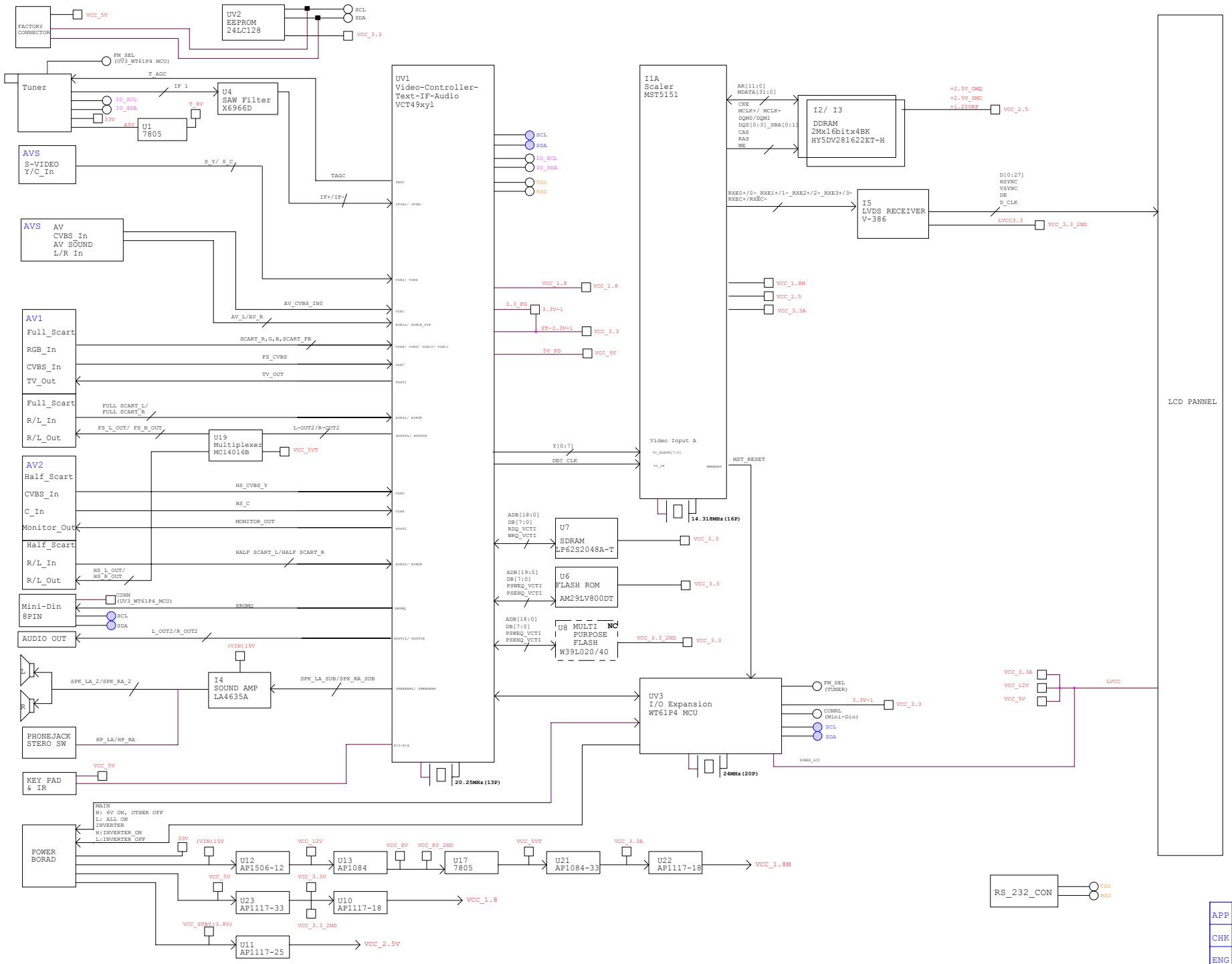

APP		MODEL: LOEWE_LCDTV_20INCH
		TITLE: LCDTV_20_BLOCK_DIAGRAM
CHK		PCB:
ENG		DWG NO:
		SHEET 00 / 10 REV. 06
		DATE: 2005. 05.17
DWG		LOEWE

SCHEMATICS

MAIN BOARD

*LOEWE:_LCDTV_20_COVER_PAGE
00:LCDTV_20_BLOCK DIAGRAM
01:LCDTV_20_SCART_AVOUT
02:LCDTV_20_MST5151(208pin)
03:LCDTV_20_FRAME_BUF_MEMORY
04:LCDTV_20_AUDIO_AMP & Tunner
05:LCDTV_ MEM & Emulator
06:LCDTV_20_ OSD/IR
07:LCDTV_SUB_AV_SVHS_HP
08:LCDTV_20_LVDS&PANEL
09:LCDTV_20_VCT49XYII
10:VCT49XYI MEM & Emulator

SUB BOARD

TUNER_B/D&A/V_B/D

APP		MODEL: LOEWE_LCDTV_20INCH
		TITLE: *LOEWE:LCDTV_20_COVER PAGE
CHK		PCB:
ENG		DWG NO:
		SHEET * / 10 REV. 07
		DATE: 2005.08.29
DWG		LOEWE

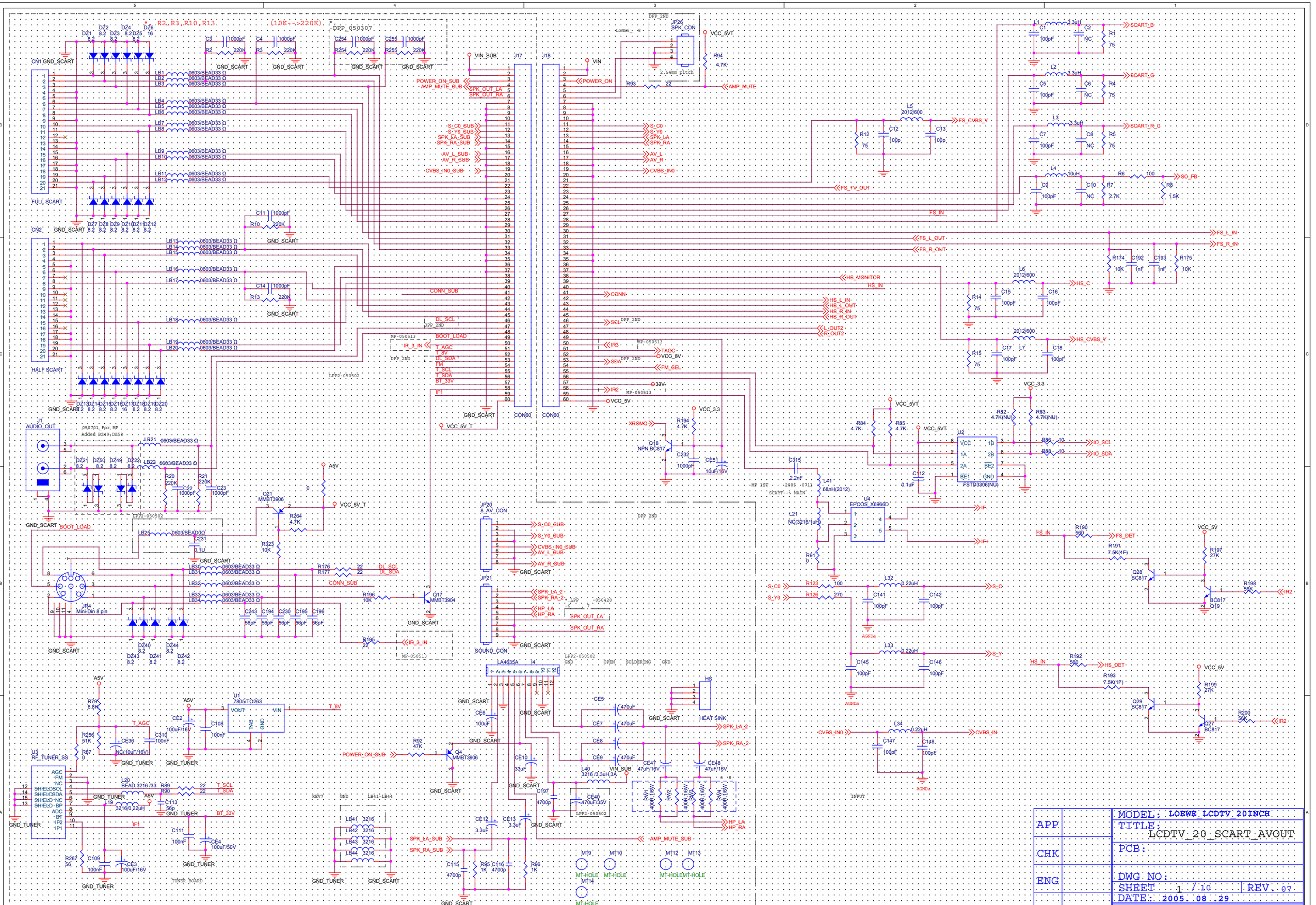

APP		MODEL: LOEWE_LCDTV_20INCH
		TITLE: LCDTV_20_SCART_AVOUT
CHK		PCB:
ENG		DWG NO:
		SHEET 1 / 10 REV. 07
DWG		DATE: 2005.08.29
		LOEWE

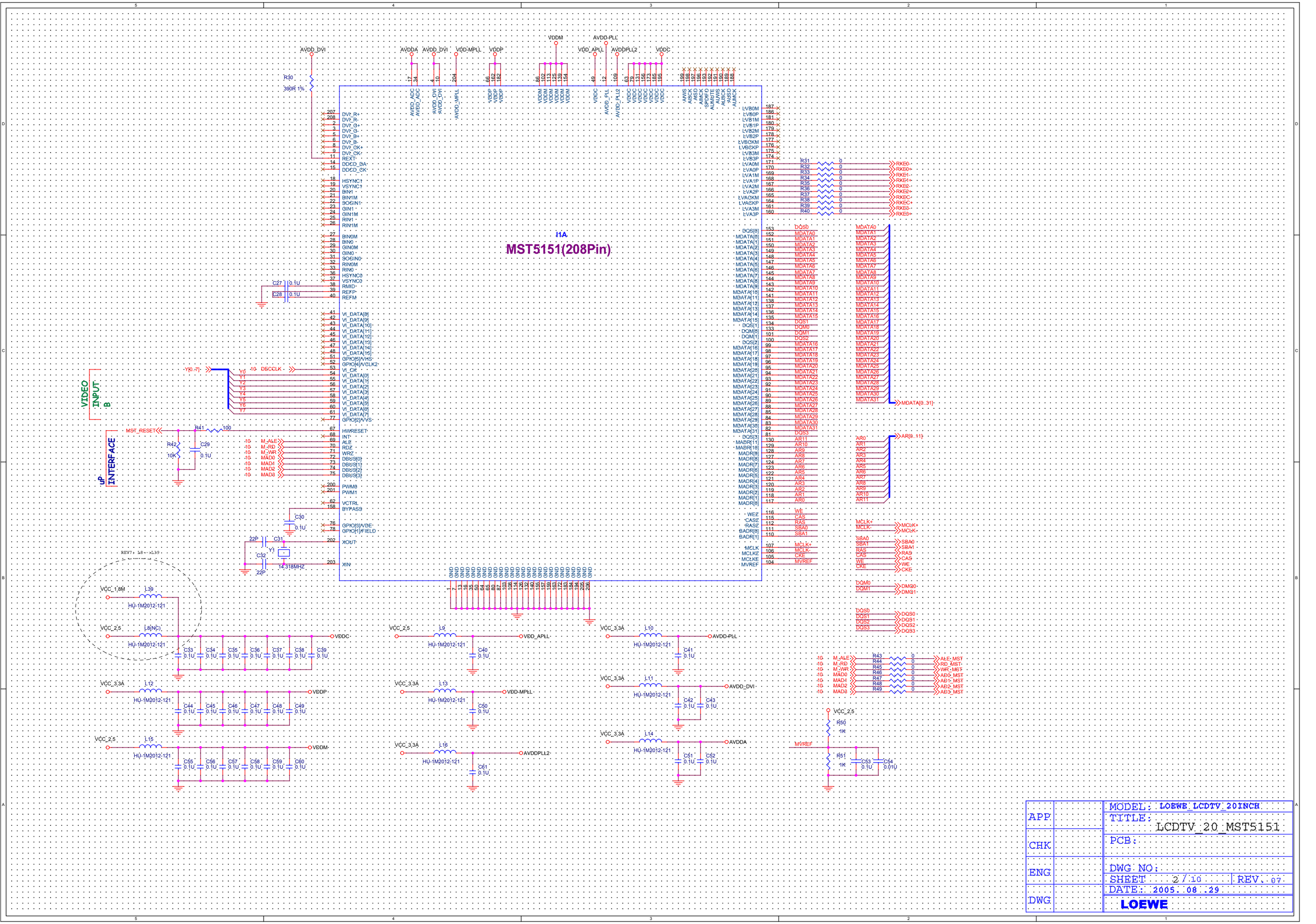

APP		MODEL: LOEWE_LCDTV_20INCH
		TITLE: LCDTV_20_MST5151
CHK		PCB:
ENG		DWG NO:
		SHEET 2 / 10 REV. 07
DWG		DATE: 2005.08.29
		LOEWE

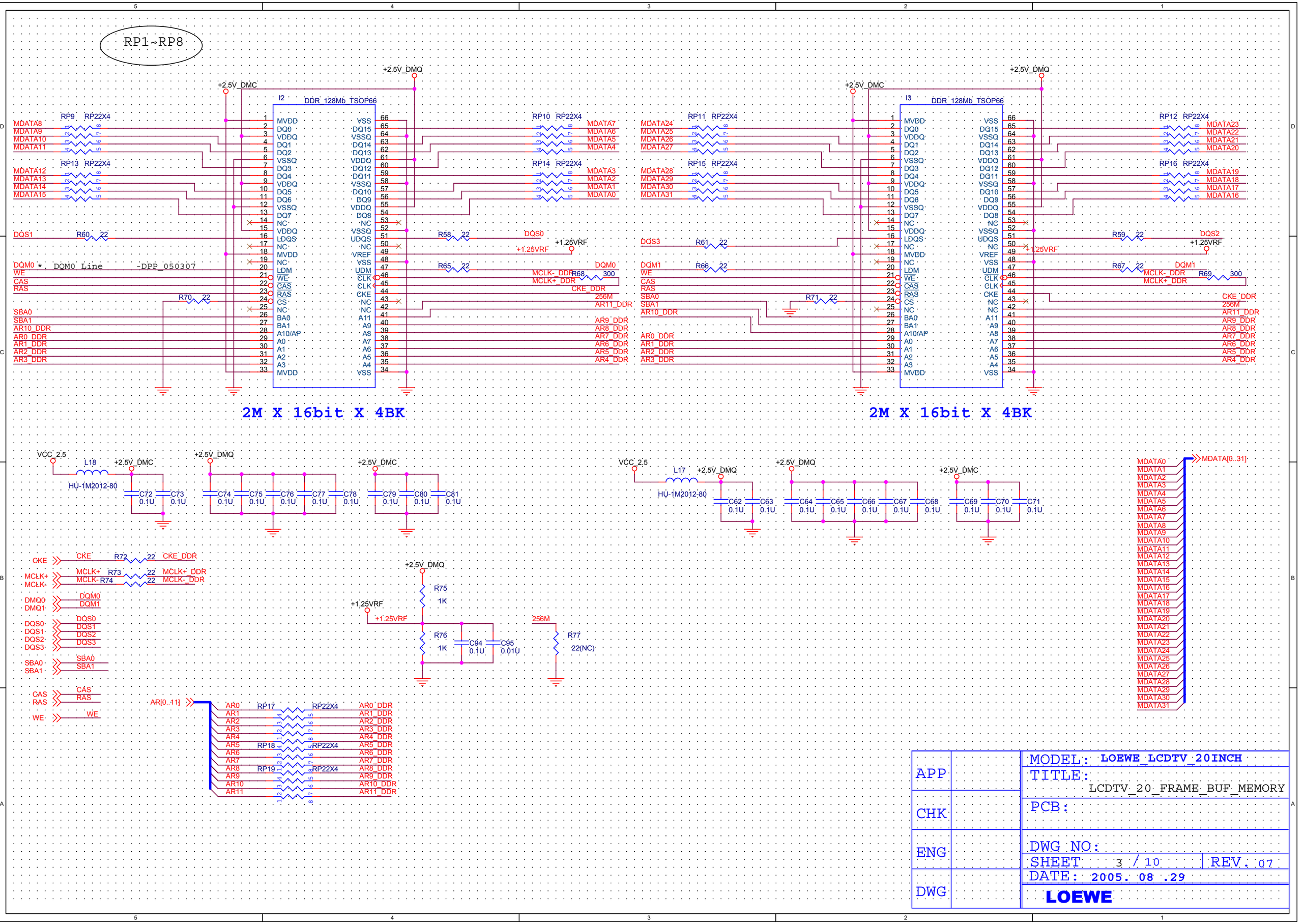

APP		MODEL: LOEWE_LCDTV_20INCH
		TITLE: LCDTV_20_FRAME_BUF_MEMORY
CHK		PCB:
ENG		DWG NO:
		SHEET 3 / 10 REV. 07
DWG		DATE: 2005. 08 .29
		LOEWE

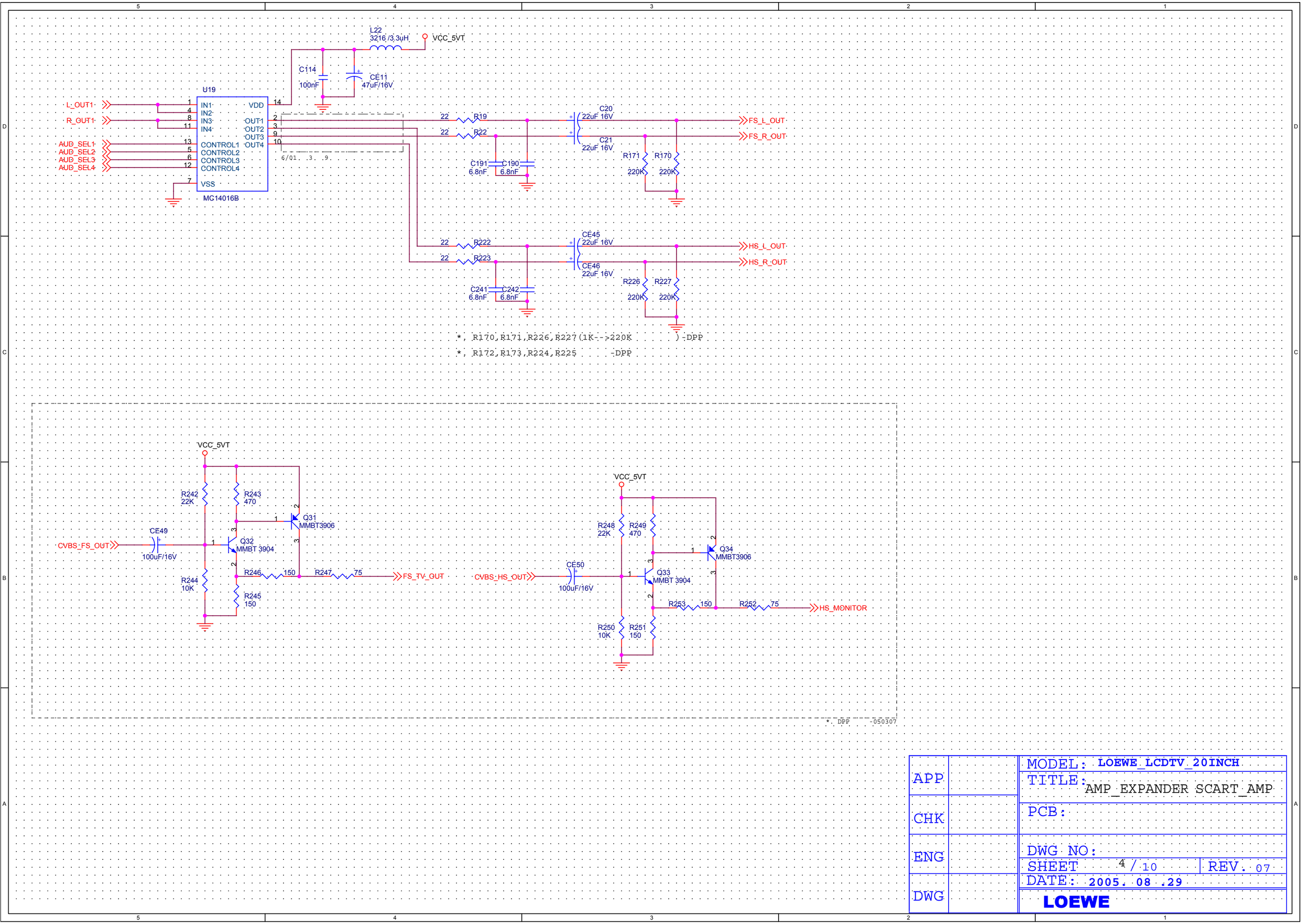

APP		MODEL: LOEWE_LCDTV_20INCH
		TITLE: AMP_EXPANDER SCART_AMP
CHK		PCB:
ENG		DWG NO:
		SHEET 4 / 10 REV. 07
DWG		DATE: 2005. 08 .29
		LOEWE

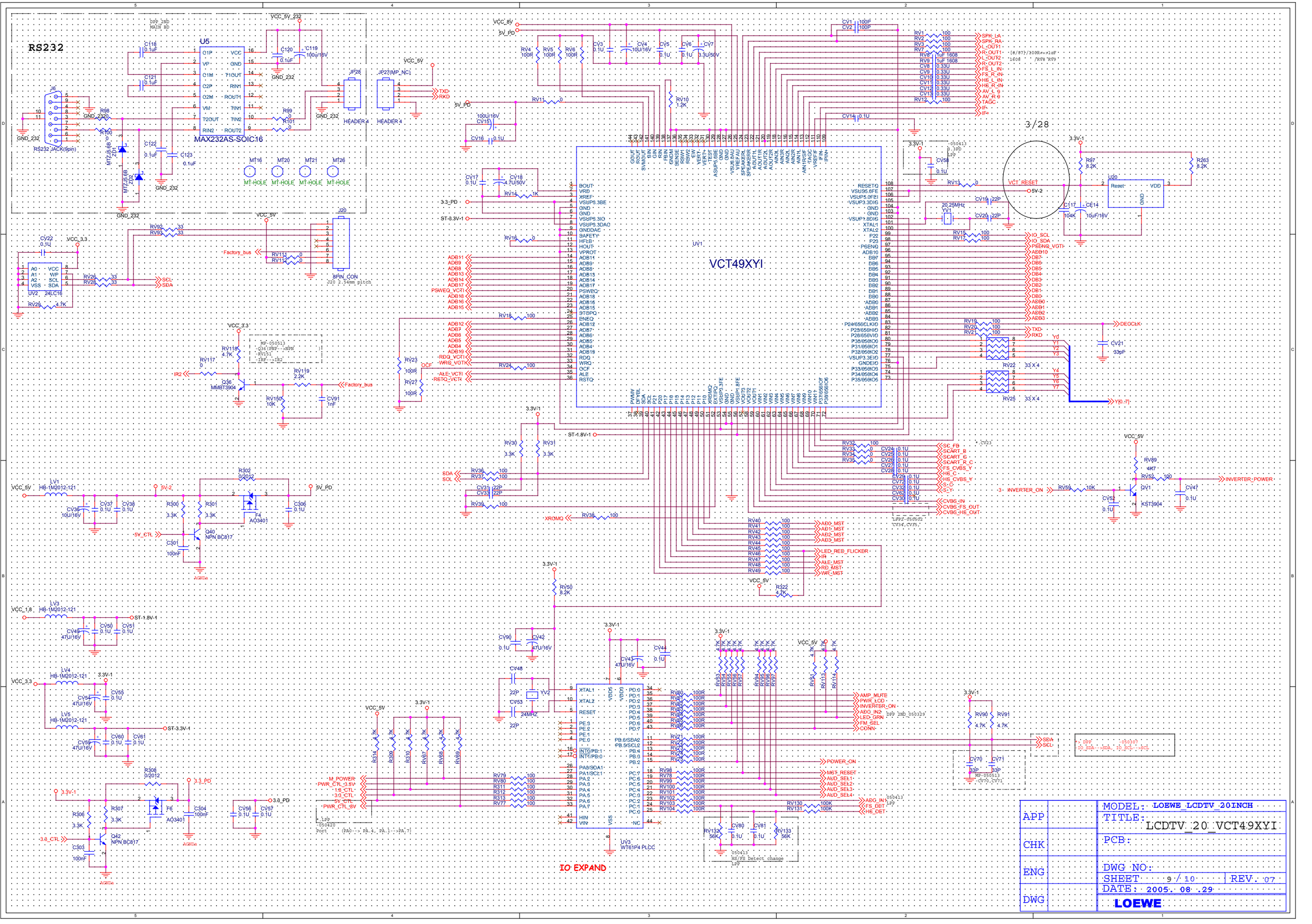
RS232
U5
MAX232AS-SOIC16
J6
RS232 JACK(9pin)
JP28
JP27(MP_NC)
HEADER 4
MT-HOLE
J20
8PIN_CON
UV2 24LC16
UV1
VCT49XYI
U20
Reset
VDD
GND
YV1
20.25MHz
YV2
24MHz
Q36
MMBT3904
Q40
NPN BC817
Q42
NPN BC817
F4
AO3401
F6
AO3401
LV1
HB-1M2012-121
LV3
HB-1M2012-121
LV4
HB-1M2012-121
LV5
HB-1M2012-121
QV1
KST3904
UV3
WT61P4 PLCC
IO EXPAND
INVERTER_POWER
INVERTER_ON
MODEL: LOEWE_LCDTV_20INCH
TITLE: LCDTV_20_VCT49XYI
PCB:
DWG NO:
SHEET 9 / 10
REV: 07
DATE: 2005. 08 .29
LOEWE
APP
CHK
ENG
DWG

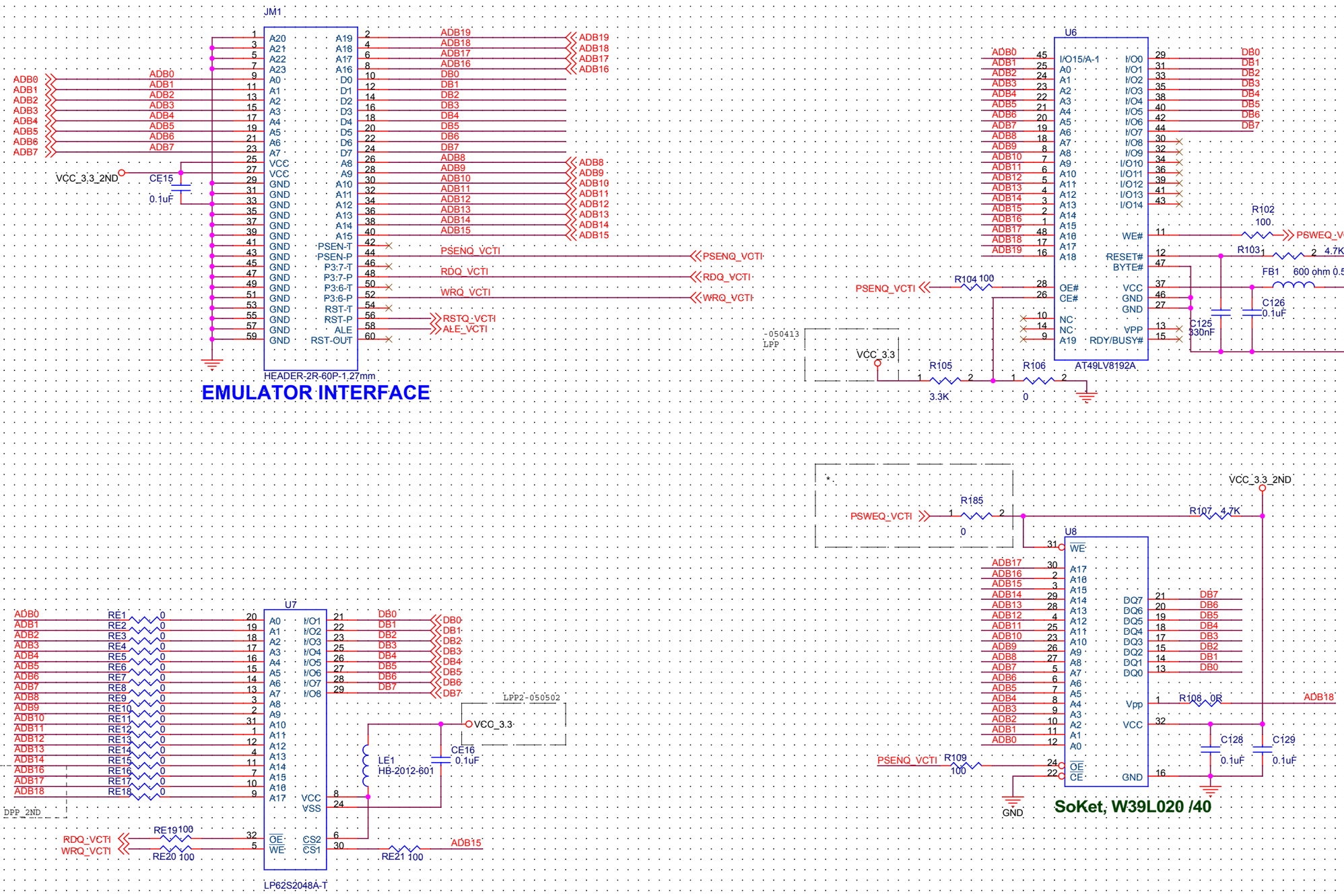

EMULATOR INTERFACE

APP		MODEL: LOEWE_LCDTV_20INCH
		TITLE: LCDTV_MEM&Emulator
CHK		PCB:
ENG		DWG NO:
		SHEET 5 / 10 REV. 07
		DATE: 2005.08.29
DWG		LOEWE

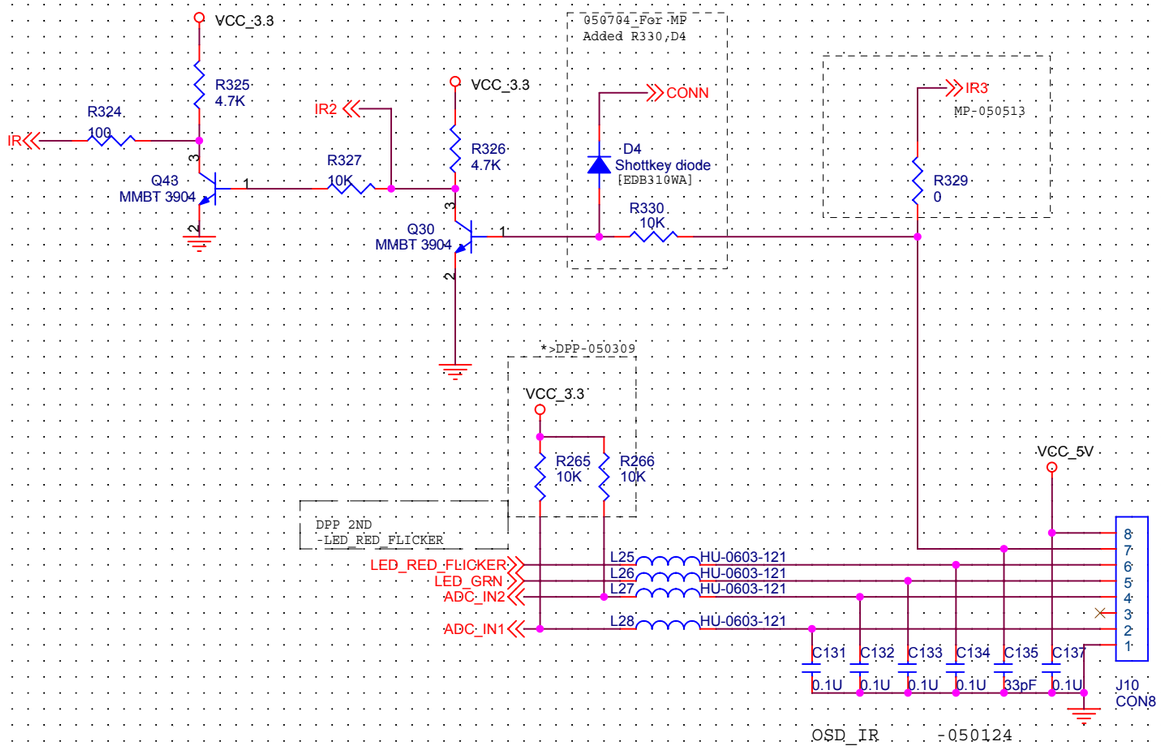

APP		MODEL: LOEWE_LCDTV_20INCH
		TITLE: OSD & IR
CHK		PCB:
ENG		DWG NO:
		SHEET 6 / 10 REV. 07
DWG		DATE: 2005. 08 .29
		LOEWE

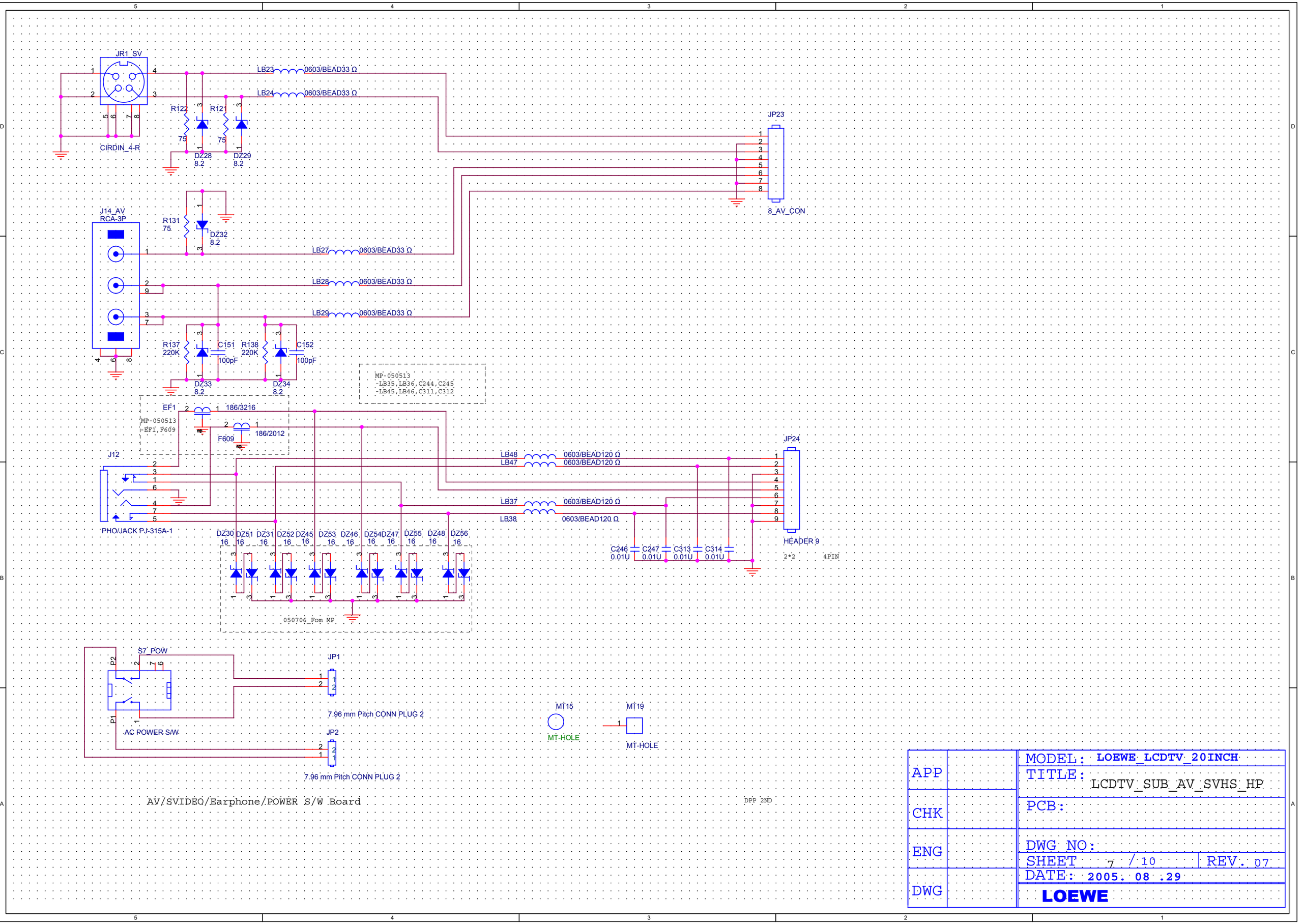
JR1_SV
CIRDIN_4-R
LB23 0603/BEAD33 Ω
LB24 0603/BEAD33 Ω
R122 75
R121 75
DZ28 8.2
DZ29 8.2
JP23
8_AV_CON
J14_AV
RCA-3P
R131 75
DZ32 8.2
LB27 0603/BEAD33 Ω
LB28 0603/BEAD33 Ω
LB29 0603/BEAD33 Ω
R137 220K
C151 100pF
R138 220K
C152 100pF
DZ33 8.2
DZ34 8.2
MP-050513
-LB35,LB36,C244,C245
-LB45,LB46,C311,C312
EF1 186/3216
MP-050513
-EF1,F609
F609 186/2012
J12
PHO/JACK PJ-315A-1
LB48 0603/BEAD120 Ω
LB47 0603/BEAD120 Ω
LB37 0603/BEAD120 Ω
LB38 0603/BEAD120 Ω
JP24
HEADER 9
2*2 4PIN
C246 0.01U
C247 0.01U
C313 0.01U
C314 0.01U
DZ30 16
DZ51 16
DZ31 16
DZ52 16
DZ45 16
DZ53 16
DZ46 16
DZ54 16
DZ47 16
DZ55 16
DZ48 16
DZ56 16
050706_Fom MP
S7_POW
AC POWER S/W
JP1
7.96 mm Pitch CONN PLUG 2
JP2
7.96 mm Pitch CONN PLUG 2
MT15
MT-HOLE
MT19
MT-HOLE
AV/SVIDEO/Earphone/POWER S/W Board
DPP 2ND
APP
CHK
ENG
DWG
MODEL: LOEWE_LCDTV_20INCH
TITLE: LCDTV_SUB_AV_SVHS_HP
PCB:
DWG NO:
SHEET 7 / 10
REV. 07
DATE: 2005. 08 .29
LOEWE

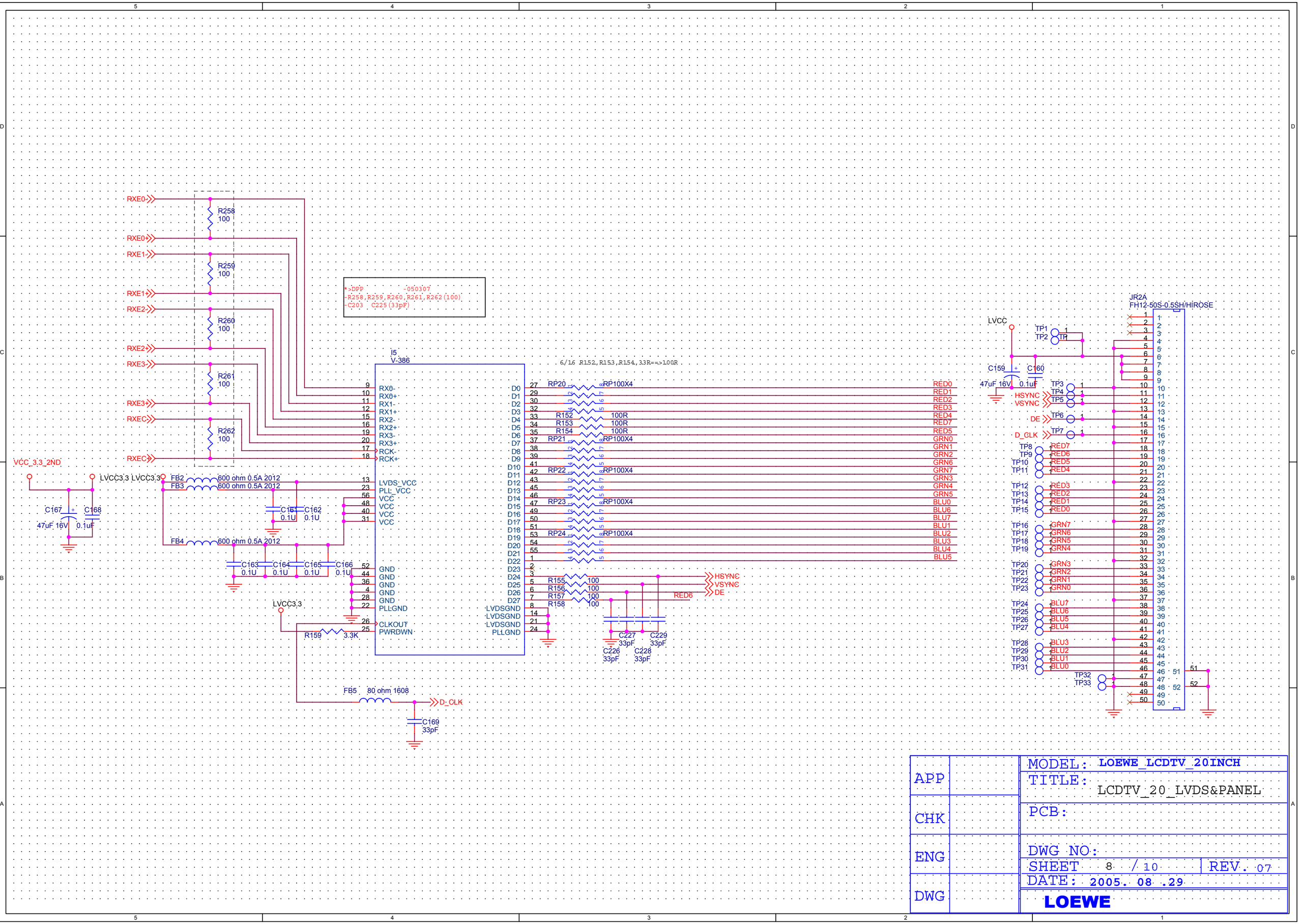

APP		MODEL: LOEWE_LCDTV_20INCH
		TITLE: LCDTV_20_LVDS&PANEL
CHK		PCB:
ENG		DWG NO:
		SHEET 8 / 10 REV. 07
DWG		DATE: 2005. 08 .29
		LOEWE

*OPTION (PANEL)

	L35	L36	L37
S/S TN	O	X	X
LG IPS	X	O	X
LG CMO TN	X	X	O

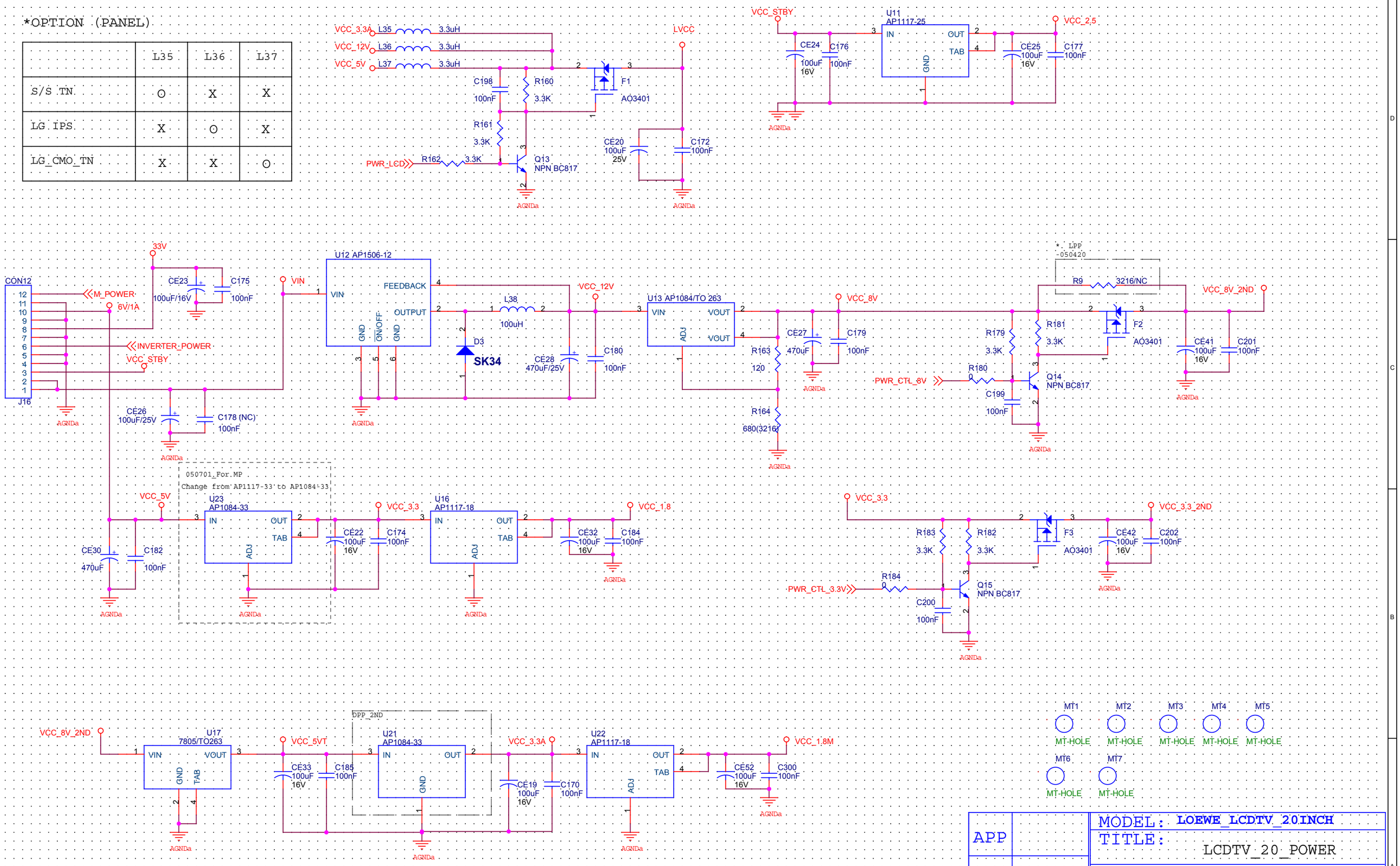

APP		MODEL: LOEWE_LCDTV_20INCH
		TITLE: LCDTV_20_POWER
CHK		PCB:
ENG		DWG NO:
		SHEET 10 / 10 REV. 07
DWG		DATE: 2005. 08 .29
		LOEWE

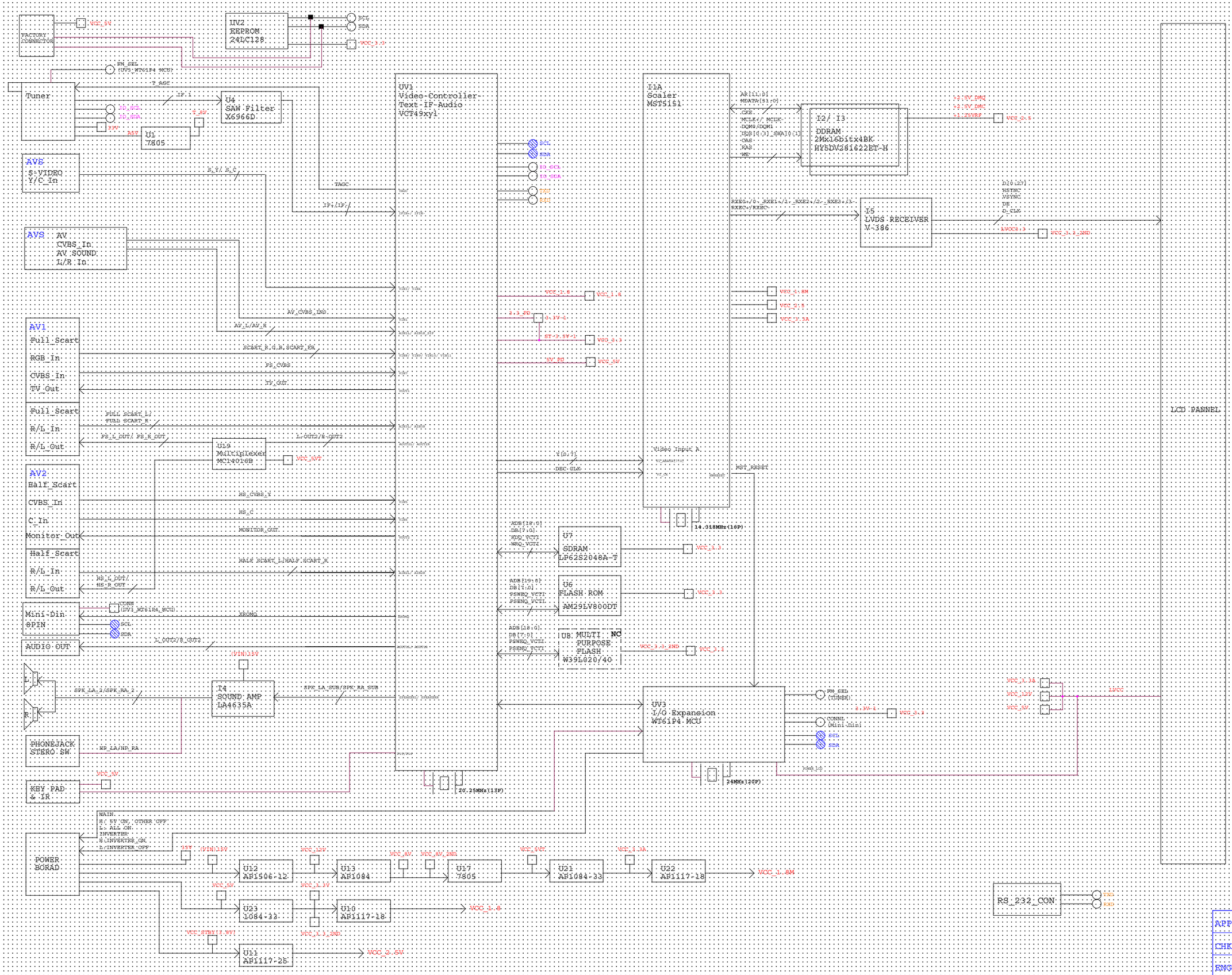

APP		MODEL: LOEWE_LCDTV_20INCH
		TITLE:
CHK		PCB:
ENG		DWG NO:
		SHEET: 00 / 10 REV: 03
		DATE: 2005.08.25
DWG		LOEWE

SPECIFICATION FOR APPROVAL

(FOR LCD MNT 20.1" 6LAMP APPLICATION PURPOSE)

TFT LCD POWER SYSTEM

PART NO. : 89431001

CONTENTS OF SPECIFICATION

*. ADAPTER PART

1 . General Description---------- 4/21
1.1 Product Description ---------- 4/21
1.2 parameter Specification---------- 4/21
2. Electrical Requirements---------- 4/21
2-1 Input requirements---------- 4/21
2-1-1. Input Voltages---------- 4/21
2-1-2. Inrush current---------- 4/21
2-1-3. Input Fuse ---------- 4/21
2-1-4. Input Current ---------- 4/21
2-1-5. Frequency---------- 4/21
2-1-6. Efficiency ---------- 4/21
2-1-7. Primary Over Current Protection---------- 4/21
2-1-8. DPMS Mode---------- 4/21
2-1-9. Configuration---------- 4/21
2-1-10. Earth Leakage Current.---------- 4/21
2-1-11. Hi-pot tests (Dielectric withstand voltage)---------- 4/21
2-1-12. Insulation Resistance---------- 4/21
2-2. Output Requirements---------- 5/21
2-2-1. Output Voltage Regulation.---------- 5/21
2-2-2. Output Voltage and Current---------- 5/21
2-2-3. Dynamic Load Regulation---------- 5/21
2-2-4. 5V peak Current Limited---------- 5/21
2-2-5. Ripple and Noise---------- 6/21
2-2-6. Hold Up Time---------- 6/21
2-2-7. Over Current Protection---------- 6/21
2-2-8. Short Circuit Protection---------- 6/21
2-2-9. Open Circuit Protection---------- 6/21
2-2-10. Output Rise Time---------- 7/21
2-2-11. Overshoot---------- 7/21
2-2-12. Drop-Out---------- 7/21
2-2-13. Over Temperature Protection(Latch off)---------- 7/21
2-2-14. Outgoing Test Item---------- 7/21
3. Cooling---------- 7/21
4. Environmental requirements---------- 7/21
4-1. Temperature---------- 7/21
4-2. Humidity---------- 7/21
5. Reliability---------- 8/21
5-1. Mean time Between Failure(MTBF)---------- 8/21
5-2 Life / Power ON Hours ---------- 8/21
6.Burn-In---------- 8/21
7.Lighting Surge Test---------- 8/21
8. Connectors---------- 8/21
9. Mechanical Drawing---------- 9/21
10. Marking (label)---------- 9/21
11. PCB DRAWING---------- 10/21
11-1. TOP ---------- 10/21
11-2. BOS---------- 11/21
12. Adapter circuit ---------- 12/21

1 . General Description

1.1 Product Description

This Specification defines the input, output, performance characteristics. Environment, noise and safety requirements for a power supply

1.2 parameter Specification

Unless specification otherwise, all parameters must be met over the limit of Temperature load, and input voltage.

2. Electrical Requirements

2-1 Input requirements

2-1-1. Input Voltages
Normal voltage : 100 to 240Vrms
Voltage range : 90 to 264Vrms

2-1-2. Inrush current
The inrush current should cause no damage to the power supply which is testing at any AC input voltage as specified in 2-1-1.
And inrush current at 115VAC must be limited 30A(o-peak) max. at cold start and 20A max. at warm start; for 240VAC it must be limited to 50A Max. at cold start and 35A Max. at warm start.

2-1-3. Input Fuse
the live line side of the input shall not blow up.

2-1-4. Input Current
less than 1.5Arms at 96 to 264Vac input

2-1-5. frequency
60 ± 3Hz / 50 ± 3Hz

2-1-6. Efficiency
When 96-264Vac line input voltage(110Vac), the efficiency shall be 75% or better under maximum load.

2-1-7. Primary Over Current Protection
An adequate internal fuse on the AC input line shall be provided.

2-1-8. DPMS Mode
Input 230vac 50Hz : Under 1 W(NO-load)
Input 230vac 50Hz at LOAD 334mW : Input power Consumption Under 1W.

2-1-9. Configuration
2 Conductors (Live, neutral)

2-1-10. Earth Leakage Current.
0.5mA Max (250V, 50Hz)

2-1-11. Hi-pot tests (Dielectric withstand voltage)
: 3KV / 1sec (AC) at 10mA (Primary to Secondary)

2-1-12. Insulation Resistance
Insulation resistance shall be more than 100M at 500Vdc between Primary Live, neutral line and secondary.

2-2. Output Requirements

2-2-1. Output Voltage Regulation.

The 5V output voltage regulation shall be ±5% and 12V output voltage Regulation shall be –10% ~+55%, including the effects]
Of line voltage variations, load current, ripple and noise, and the AC Component of the load current. The effect of dynamic load change is Not included in this limit.

2-2-2. Output Voltage and Current

DC Output	Output 1	Output 2	Output 3	Output 4
Rated Voltage	33V	14V	5.2V	3.8V
Max. Current	0.1A	4.0A	1.0A	0.2A
Min. Current	0.05A	0.1A	0.1A	0.1A
DPMS				

2-2-3. Dynamic Load Regulation

±5% for 50%↔100% or 100%↔50%load change for 12Vdc at any frequency up to 250Hz (duty50%)

2-2-4. 5V peak Current Limited

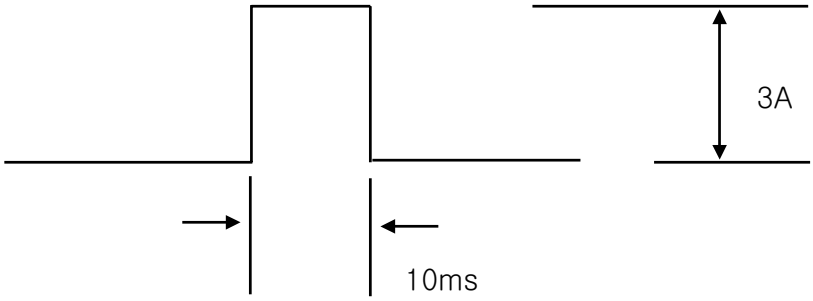

The 5V output voltage regulation shall be ±5% for 10ms on condition Of 3A peak current

2-2-5. Ripple and Noise
The power supply shall not exceed the following limits on the indicated Voltages for 60Hz or 50Hz ripple, switching frequency ripple and noise And dynamic load variations, measured with a 20MHz bandwidth

DC Output	Output 1	Output 2	Output 3	Output 4
Rated Voltage	33V	14V	5.2V	3.8V
Ripple Voltage	250mVp-p	200mVp-p	150mVp-p	150mVp-p

Column A : Output voltage.
Column B : AC Ripple + Switching Ripple and Noise

* Ripple and noise measured at the end of output cables which are added a 0.1uF(104) ceramic capacitor and a 47uF electrolytic capacitor(connect parallel).

2-2-6. Hold Up Time

The power supply shall maintain voltage regulation within the Specified limits in paragraph 2-2-1 for at least 16 milliseconds after Lost of input voltage measure at 110VAC and at maximum output load.

2-2-7. Over Current Protection
The power supply shall not be damaged by a over current from the Output to return line. If the power entered the OCP mode, It shall be Shut Down.

2-2-8. Short Circuit Protection
The power supply shall not be damaged by short between DC output And DC ground.

2-2-9. Open Circuit Protection
When primary power is applied with no load on any output level, no damage or hazardous conditions should occur.

2-2-10. Output Rise Time

At turn on, the rise time of +33V/+14V output voltage (measured from the 10% point to the 90% point of the +33V/+14V nominal)shall be test than 30msec

2-2-11. Overshoot

The output overshoot at turn-on shall not exceed 10% of normal voltage value with or without the load connected.

2-2-12. Drop-Out

With a half cycle input voltage drop-out, the unit shall operate within the prescribed voltage with a drop-out pulse repetition rate of 500ms.

Conditions	Limits
Full load normal input AC voltage	Meet all requirements

2-2-13. Over Temperature Protection(Latch off)

The OTP must operate when semiconductor' s body temperature Exceed 135°C for restart the unit recycle input.

2-2-14. Outgoing Test Item

1) Ripple and Noise
2) Over current Protection
3) Short Circuit Protection
4) Line Regulation
5) Load Regulation

3. Cooling

Cooling shall be with natural convection cooling.
Storage : 5% to 95% non-condensing

4. Environmental requirements

4-1. Temperature

Operating : 0°C to + 40°C
Storage : -20°C to + 80°C

4-2. Humidity

Operating : 20% to 85% non-condensing

5. Reliability

5-1. Mean time Between Failure(MTBF)

The power supply shall be designed and produced to have a mean time between failures(MTBF)of 20,000 operating hours at 90% confidence -level while operating under the following condition.

1.AC Input Voltage : 110Vac and 230Vac
2.Duty Cycle : 6hours ON. 2hours OFF
3. Ambient Temp : 25℃ ± 2℃
4. Humidity : Prevailing Conditions

5-2 Life / Power ON Hours

The Power Supply must be designed to operate for 20,000 power-on-hours. About 2 years at an ambient temperature of 25℃

6.Burn-In

2hours at 50℃(±10℃),Nominal input voltage, maximum load.
AC on/off must be test time after burn-in.

7.Lighting Surge Test

7-1. CR Mode Minimum 6KV PASS
7-2. CC Mode Minimum 4KV PASS

8. Connectors

8-1. AC input Connector : YW396-03AV
8-2. Output Connector Spec : 12pin
Vendor : YEONHO SMW200-12

9. Mechanical Drawing

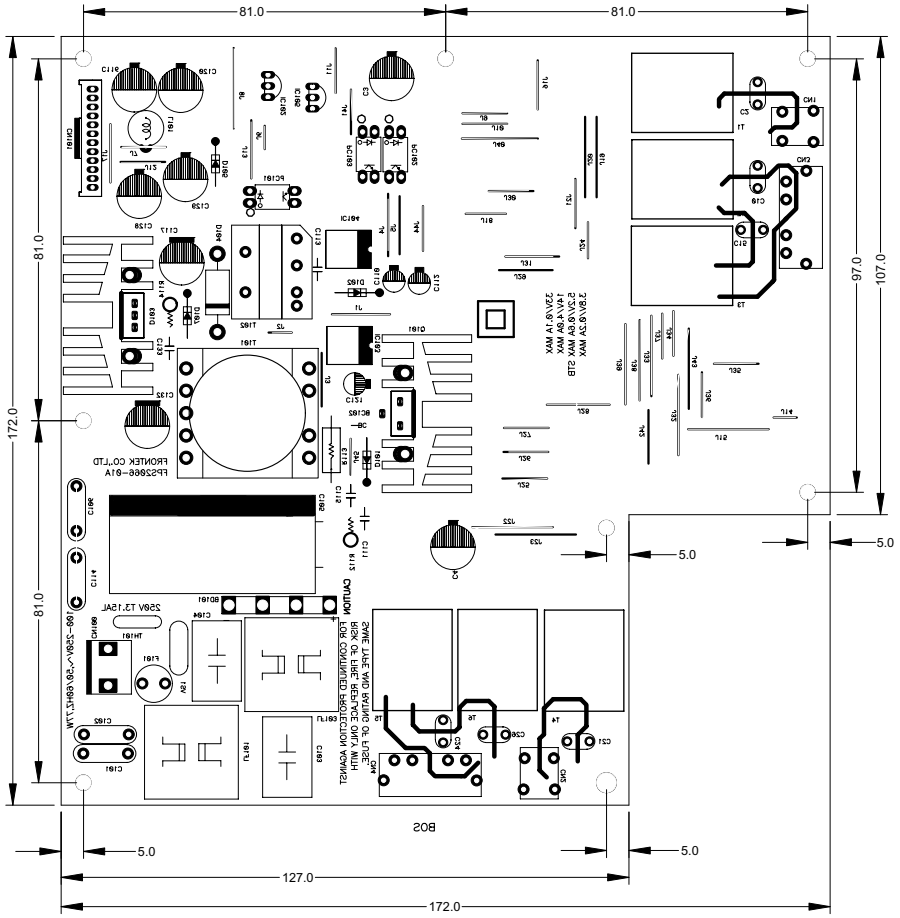

[BOTTOM VIEW]

10. Marking (label)

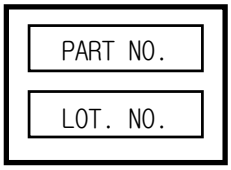

*. PART NO. : FLF2066-01A
*. LOT NO. : F O O O O O O O O C

FRONTEK
LINE
YEAR
MONTH
DAY
Marking in case of made In China

11-1. PCB DRAWING (TOP)

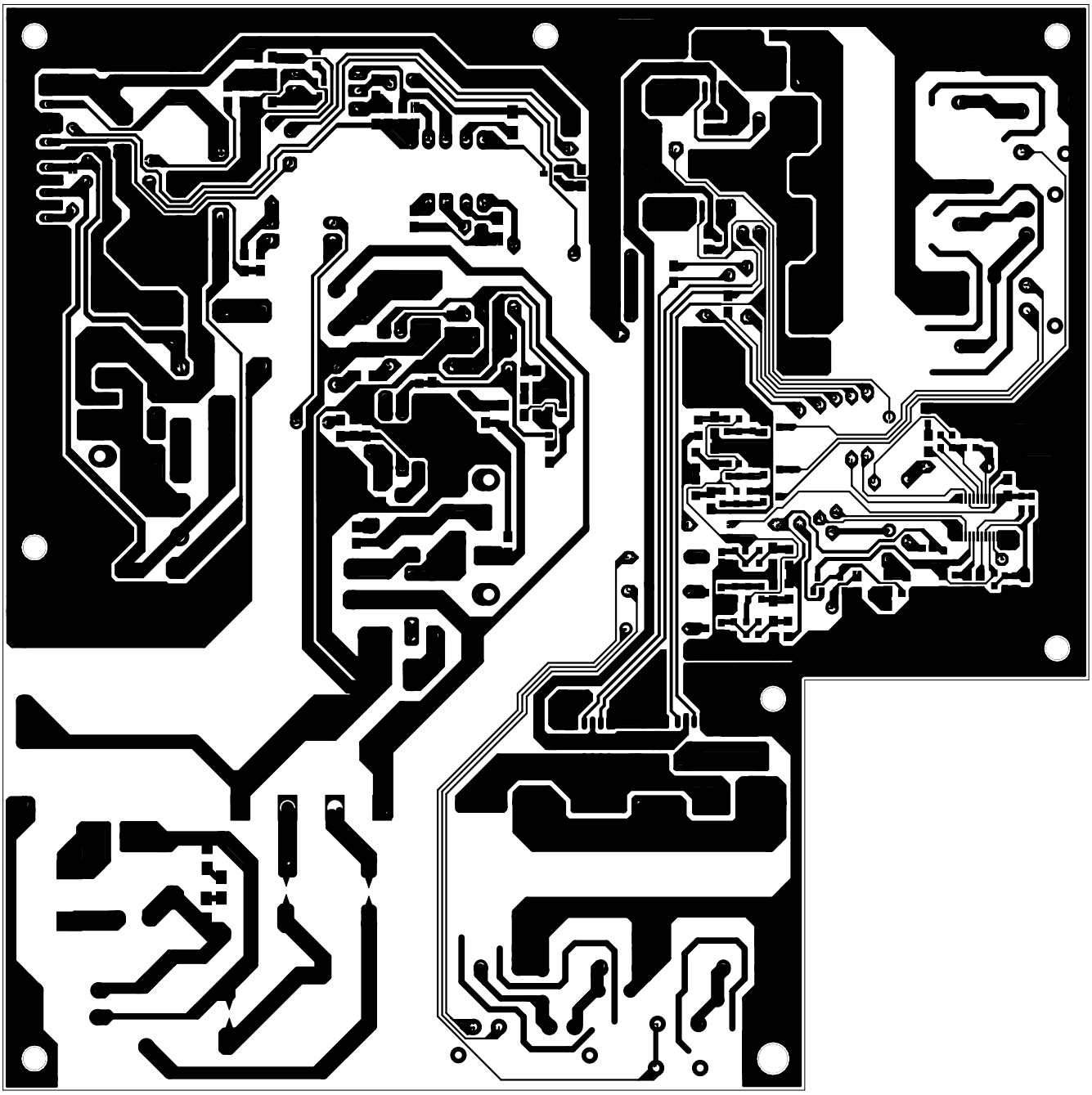

11-2. PCB DRAWING (BOS)

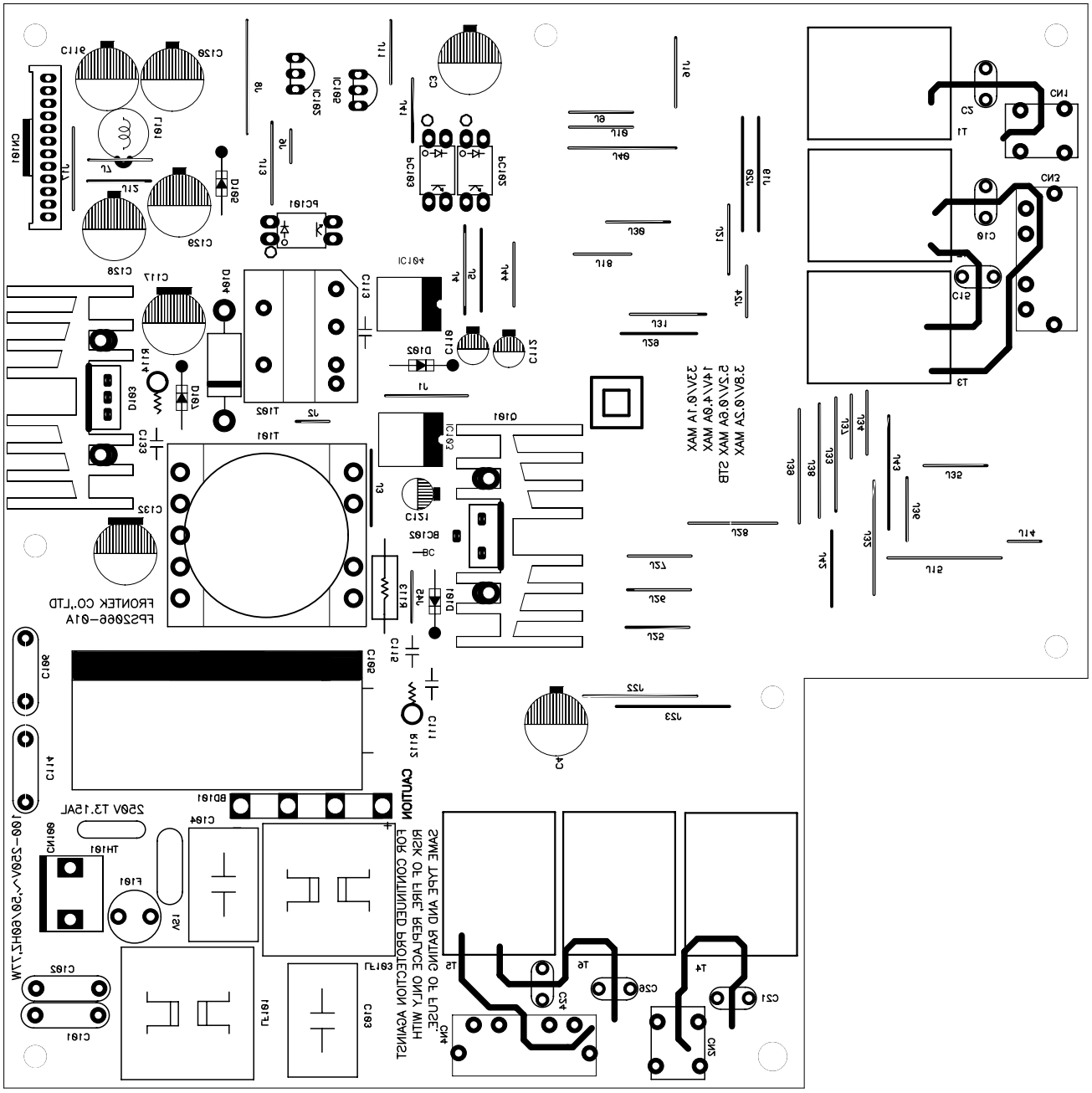

12. Adapter circuit

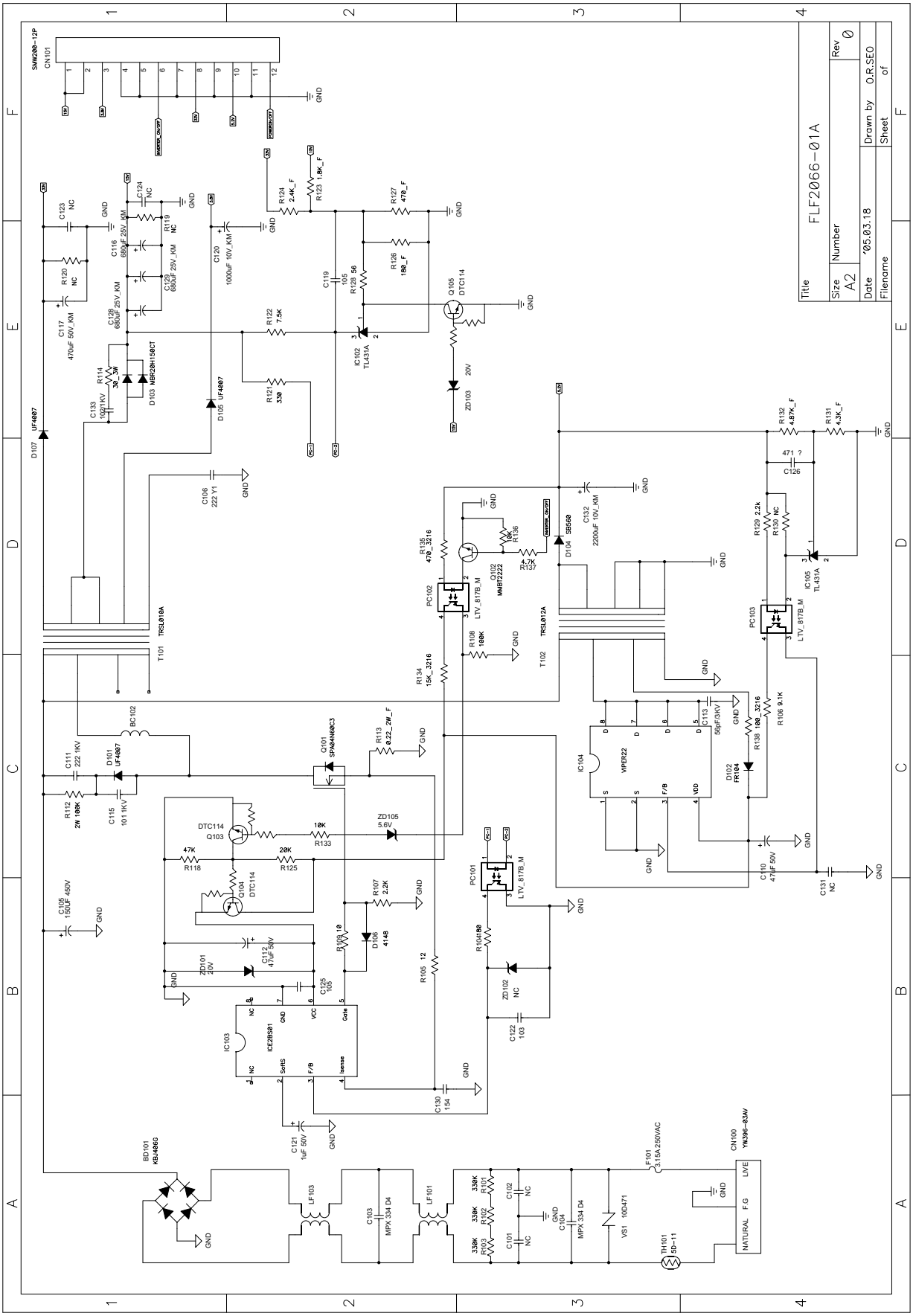

CONTENTS OF SPECIFICATION

*. INVERTER PART

1. GENERAL DESCRIPTION---------- 14/21

2. SCOPE---------- 14/21

3.Absolute maximum rating---------- 14/21

4. ELECTRICAL CHARACTERISTICS---------- 15/21

5. Functional Pin Description---------- 16~17/21

6. Quality Assurance Test---------- 18/21

7. Inverter circuit ---------- 19/21

8. PARTS LIST ---------- 20~21/21

1. GENERAL DESCRIPTION.

THIS DC/AC INVRETER SHALL BE USED FOR 20.1" 6 LAMP LCD BACK LIGHT SYSTEM.

2. SCOPE

-INPUT RANGE(14VDC –16VDC)
-OPEN LAMP PROTECTION
-OUTPUT SHORT CIRCUIT PROTECTION
-CURRENT FEEDBACK CONTROL METHOD

3.Absolute maximum rating

- INPUT SUPPLY VOLTAGE : 13 ~ 15V
- INPUT CURRENT : 2.5A
- OUTPUT CURRENT : 7.0~7.5mArms
- INPUT SIGNAL VOLTAGE (ON/OFF / CONTROL) : -0.3V ~ 6.0V
- AMBIENT OPERATING TEMPERATURE : 0℃ ~ 60℃
- STORAGE TEMPERATURE : -30℃ ~ 80℃
- OPERATING & STORAGE HUMIDITY : 10% ~ 85%

4. ELECTRICAL CHARACTERISTICS

	Items (Unit)	Sign.	Condition		Min.	Typ.	Max.
1	Input Current (A)	Iin	Vin=15V	CTRL=0V	2.1	2.3	2.5
2	Output Current (mA)	Iout 1,2,3,4	Vin=15V	CTRL=0V	5.5	6.5	7.5
3	Output Current (mA)	Iout 5,6	Vin=15V	CTRL=0V	5.5	6.5	7.5
4	Lamp Frequency (kHz)	f	Vin=15V	CTRL=5V	43	50	57
5	ON/OFF Control	ON	Vin=15V, ON/OFF=5V		Normal Operation		
		OFF	Vin=15V, ON/OFF=0V		Shunt-down (Lamp off)		
6	Dim Adjust (Lamp Current Control)	CTRL	CTRL=0V,Max Current				
7	Kick-Off Voltage(Vrms)	Vk-off	Kick-Off		MORE THAN 1100		

* Lamp Current is checked at high side of Lamp Wire.

5. Functional Pin Description

5-1. Output Connector CN101 : SMW200-12(YEON-HO, JST, MOLEX)

Pin No.	Symbol	Description
1,2	Vout 2	DC 15V OUTPUT
3	Vout 4	DC 3.8V OUTPUT
4,5,7,9,11	GND	GND
6	ON / OFF	Inverter System Return (5V:ON, 0V:OFF)
8	Vout 1	DC 33V OUTPUT
10	Vout 3	DC 6V OUTPUT
12		No connection

5-2. Output Connector CN1,CN2 : 35001WR-02A00 (YEON-HO, R:MOLEX)

No	Pin	Symbol	Description	Notes
CN1	1	HV	Power supply for lamp 3(High voltage side) - White	1
	2	LV	Power supply for lamp 3(Low voltage side) - White	2
CN2	1	HV	Power supply for lamp 4(High voltage side) - White	1
	2	LV	Power supply for lamp 4(Low voltage side) - White	2

5-3. Output Connector CN3,CN4 : 20015WR-09D00 (YEON-HO, R:MOLEX)

No	Pin	Symbol	Description	Notes
CN3	1	HV	Power supply for lamp 1(High voltage side) - Gray	1
	2	HV	Power supply for lamp 2(High voltage side) – Sky Blue	1
	3	NC	NC	
	4	LV	Power supply for lamp 1(Low voltage side) - Black	2
	5	LV	Power supply for lamp 2(Low voltage side) – Dark Blue	2
CN4	1	HV	Power supply for lamp 6(High voltage side) - Gray	1
	2	HV	Power supply for lamp 5(High voltage side) - Sky Blue	1
	3	NC	NC	
	4	LV	Power supply for lamp 6(Low voltage side) - Black	2
	5	LV	Power supply for lamp 5(Low voltage side) - Dark Blue	2

6. Quality Assurance Test

NO.	ITEMS	TEST CONDISIONS	Numbers of Samples	NOTE
0	Electrical Characteristics & Appearance test	Electrical Characteristics & Mechanical size on approval sheet	21 EA	
1	High temperature Operation Test	50℃, Vin = 13V, Ctrl = 0V, 500Hr	3 EA	
2	Low temperature Operation Test	0℃, Vin = 13V, Ctrl = 0V, 240Hr	3 EA	
3	High temperature Storage Test	80℃, 240Hr	3 EA	
4	Low temperature Storage Test	-20℃, 240Hr	3 EA	
5	High temperature & High Humidity Storage Test	40℃, 95%RH, 240Hr	3 EA	
6	Heat Shock Test	-20℃(0.5Hr) + 80℃(0.5Hr) 20 Cycle	3 EA	
7	Power On/Off test	Vin = 13V, On/Off = 20,000 Cycle	3 EA	On Time(2 sec) + Off Time(2 Sec)

7. Inverter circuit

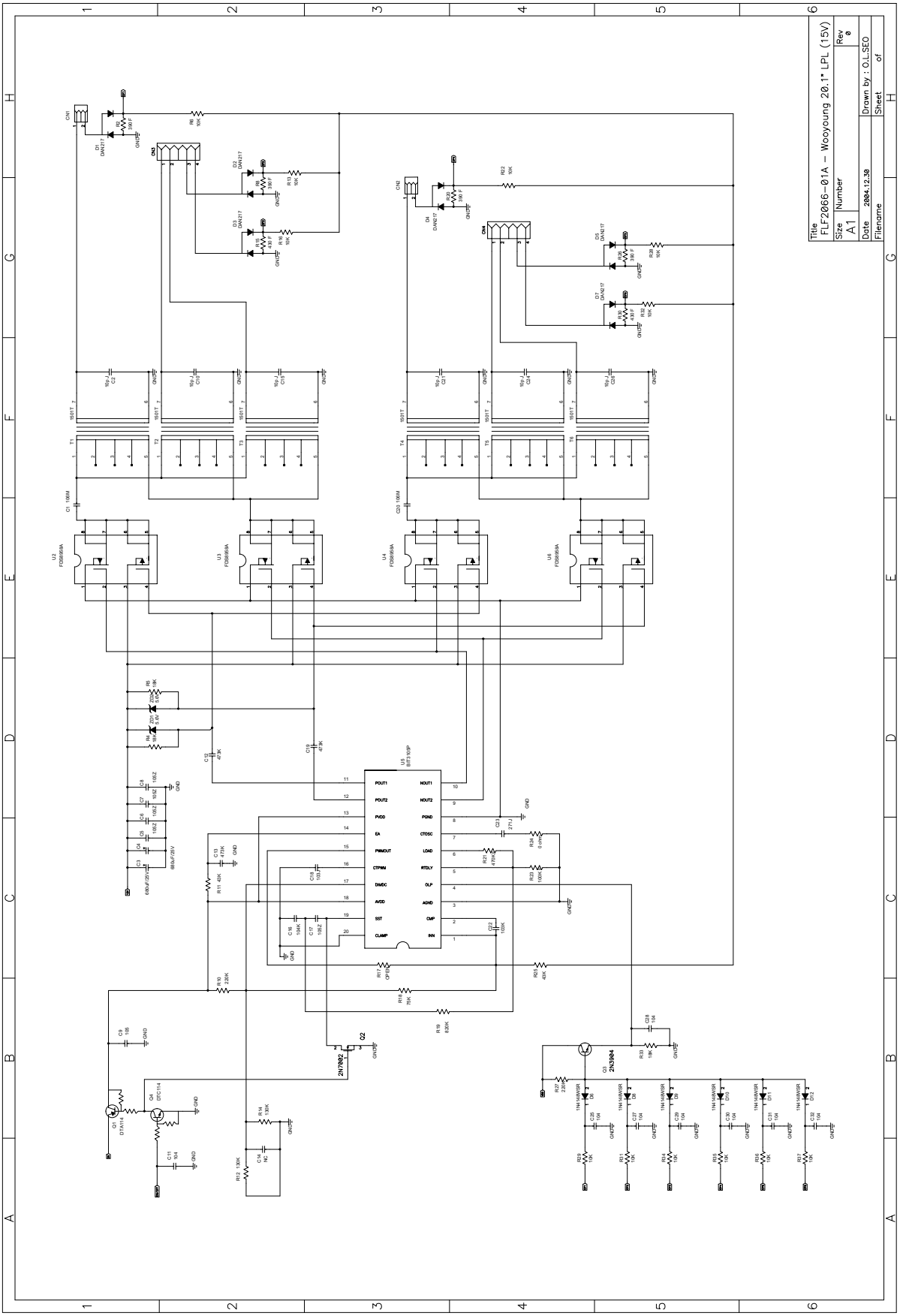

8. PARTS LIST - 1

NO.	Ref.	Part Type	1st. Vendor	2nd. Vendor	Q,ty
1	IC103	ICE2BS01	INFINEON		1
2	IC104	VIPER22	ST		1
3	Q101	SPA04N60C3	INFINEON		1
4	BD101	KBJ406G	Diodes	TSC	1
5	D104	SB560	VISHAY-GS	DIODES	1
6	D103	MBR20H150CT	VISHAY-GS	DIODES	1
7	U2,3,4,6	FDS8958	Fairchild		4
8	U5	BIT3105	BITEK		1
9	Q4,103,104,105	DTC114YUA	Rohm	DIODES	4
10	Q1	DTA114YUA	Rohm	DIODES	1
11	D106	LL4148	Vishay-GS	DIODES	1
12	D6,8,9,10,11,12	1N4148WSR	Diodes	Rohm	6
13	D1,2,3,4,5,7	BAV99	Diodes	Rohm	6
14	ZD1,2,105	BZT52C5V6S	Diodes	Rohm	3
15	ZD101,103	BZT52C20S	Diodes	Rohm	2
16	Q2	2N7002	Rohm	DIODES	1
17	C106	DG222Y1	DONGIL	DUSAN,NRT	1
18	PC101,102,103	LTV-817B-M,PC817	LITON	sharp	3
19	Q3	2N3904	Rohm	DIODES	1
20	Q102	MMBT2222	Diodes,Rohm	VISHAY-GS,AUK	1
21	C103,104	MPX334KD4	PILCO	CARLY	2
22	C105	CE150u450V105GF	SAMXON	SAMWHA,SAMYOUNG	1
23	IC102,105	TL431-A	WOOSEOK	Fairchild	2
24	BC102	EBFL002A	DONGHEUNG	GET	1
25	C2,10,15,21,24,26	10pF 3KV (CC3FSL100KFS)	DONGIL	DUSAN	6
26	C111	222K 1KV	DONGIL	DUSAN	1
27	C133	102K 1KV	DONGIL	DUSAN	1
28	C113	56pF 3KV	DONGIL	DUSAN	1
29	C115	101K 1KV	DONGIL	DUSAN	1
30	R113	2W F 0.22ohm	제일전자	스마트전자	1
31	R112	2W J 100K RADIAL	제일전자	스마트전자	1
32	D102	FR104	SHS	DIODES	1
33	D101,105,107	UF4007	SHS	DIODES	3
34	VS1	10D471	Thinking	CNR	1
35	C3,4,116,128,129	CE680u25V105KM,KMG	SAMXON	SAMWHA,SAMYOUNG	5
36	C120	CE1000u10V105KM,KMG	SAMXON	SAMWHA,SAMYOUNG	1
37	C121	CE1u50V105KM	SAMXON	SAMWHA,SAMYOUNG	1
38	C110,112	CE47U50V105KM	SAMXON	SAMWHA,SAMYOUNG	2
39	C117	CE470u50V105KM	SAMXON	SAMWHA,SAMYOUNG	1
40	C132	CE2200u50V105KM	SAMXON	SAMWHA,SAMYOUNG	1
41	C12,13,19	CC473K50V2012	SAMSUNG	TDK	3
42	C1,20	CC106M10V3216	태양유전	TDK	2
43	C23	CC271J50V2012	SAMSUNG	TDK	1
44	C18,22,122	CC103K50V2012	SAMSUNG	TDK	3
45	C11,16,25,27,28,29,30,31,32	CC104K50V2012	SAMSUNG	TDK	9
46	C130	CC154K50V2012	SAMSUNG	TDK	1
47	C5,6,7,8,9,17,125,119	CC105Z25V2012	SAMSUNG	TDK	8
48	R121	CR2012J331	SAMSUNG	Rohm	1
49	R133,136	CR2012J103	SAMSUNG	Rohm	2

8. PARTS LIST – 2

NO.	Ref.	Part Type	1st. Vendor	2nd. Vendor	Q,ty
50	R128	CR2012J560	SAMSUNG	Rohm	1
51	R105	CR2012J120	SAMSUNG	Rohm	1
52	R123	CR2012F1801	SAMSUNG	Rohm	1
53	R104	CR2012J181	SAMSUNG	Rohm	1
54	R106	CR2012J912	SAMSUNG	Rohm	1
55	R107,129	CR2012J222	SAMSUNG	Rohm	2
56	R109	CR2012J100	SAMSUNG	Rohm	1
57	R122	CR2012J752	SAMSUNG	Rohm	1
58	R137	CR2012J472	SAMSUNG	Rohm	1
59	R125	CR2012J203	SAMSUNG	Rohm	1
60	R118	CR2012J473	SAMSUNG	Rohm	1
61	R108	CR2012J104	SAMSUNG	Rohm	1
62	R126	CR2012F1800	SAMSUNG	Rohm	1
63	R127	CR2012F4700	SAMSUNG	Rohm	1
64	R124	CR2012F2401	SAMSUNG	Rohm	1
65	R132	CR2012F4871	SAMSUNG	Rohm	1
66	R131	CR2012F4301	SAMSUNG	Rohm	1
67	R138	CR3216J101	SAMSUNG	Rohm	1
68	R135	CR3216J471	SAMSUNG	Rohm	1
69	R134	CR3216J153	SAMSUNG	Rohm	1
70	R101,102,103	CR3216J334	SAMSUNG	Rohm	3
71	R18	CR1608J753	SAMSUNG	Rohm	1
72	R12,14	CR1608J134	SAMSUNG	Rohm	2
73	R23	CR1608J104	SAMSUNG	Rohm	1
74	R10,27	CR1608J224	SAMSUNG	Rohm	2
75	R15,30	CR1608F4300	SAMSUNG	Rohm	2
76	R2,8,20,26	CR1608F3900	SAMSUNG	Rohm	4
77	R21	CR1608J474	SAMSUNG	Rohm	1
78	R19	CR1608J824	SAMSUNG	Rohm	1
79	R24	CR1608J000	SAMSUNG	Rohm	1
80	R6,13,16,22,28,29,31,32,34,35,36,37	CR1608J103	SAMSUNG	Rohm	12
81	R4,5,33	CR1608J183	SAMSUNG	Rohm	3
82	R11,25	CR1608J433	SAMSUNG	Rohm	2
83	LF101,103	LFL009A	DONGHEUNG	GET	2
84	T101	TRSL011A	DONGHEUNG	GET	1
85	T102	TRSL012A	DONGHEUNG	GET	1
86	T1,2,3,4,5,6	TRS1501T-DIP	DONGHEUNG	GET	6
87	TH101	NTC 5D-11	SAMKYUNG	DSC	1
88	F101	SR-5 3.15A	SAVE FUSE		1
89	CN100	YW396-03AV	YEON HO		1
90	CN101	SMW200-12P	YEON HO		1
91	CN1,2	35002WR-02L	YEON HO		2
92	CN3,4	20015WR-09D00	YEON HO		2
93	R114	MORS 3W J 30ohm	제일전자		1
94	P.W.B CEM-1	PL2066C01	DONGMYUNG	다산	1
95	J1~45,L101	JUMPER	제일전자	스마트전자	46

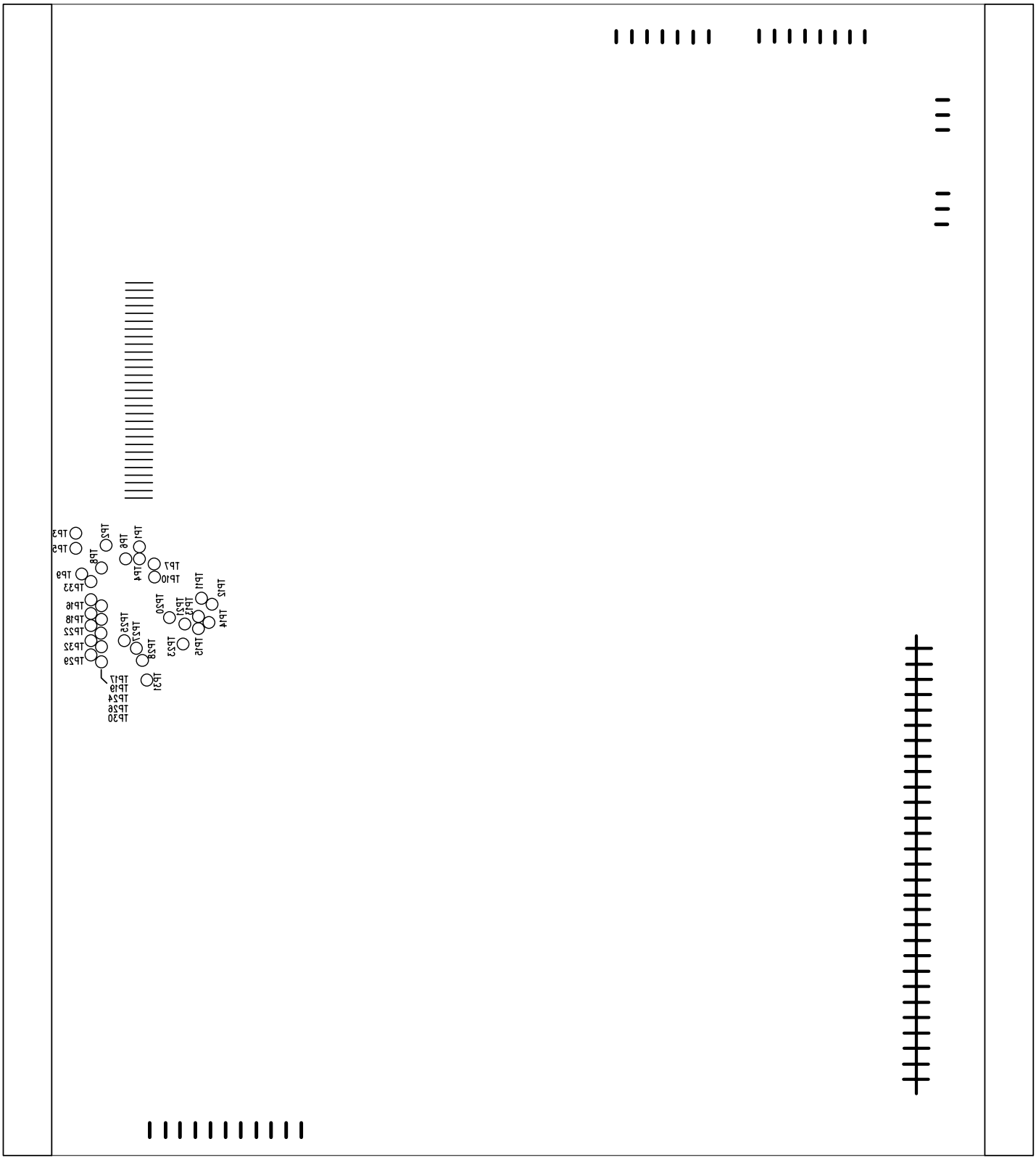
TP3
TP5
TP2
TP8
TP1
TP6
TP4
TP7
TP10
TP9
TP33
TP11
TP12
TP14
TP20
TP21
TP13
TP16
TP18
TP22
TP32
TP29
TP25
TP27
TP28
TP23
TP15
TP17
TP19
TP24
TP26
TP30
TP31

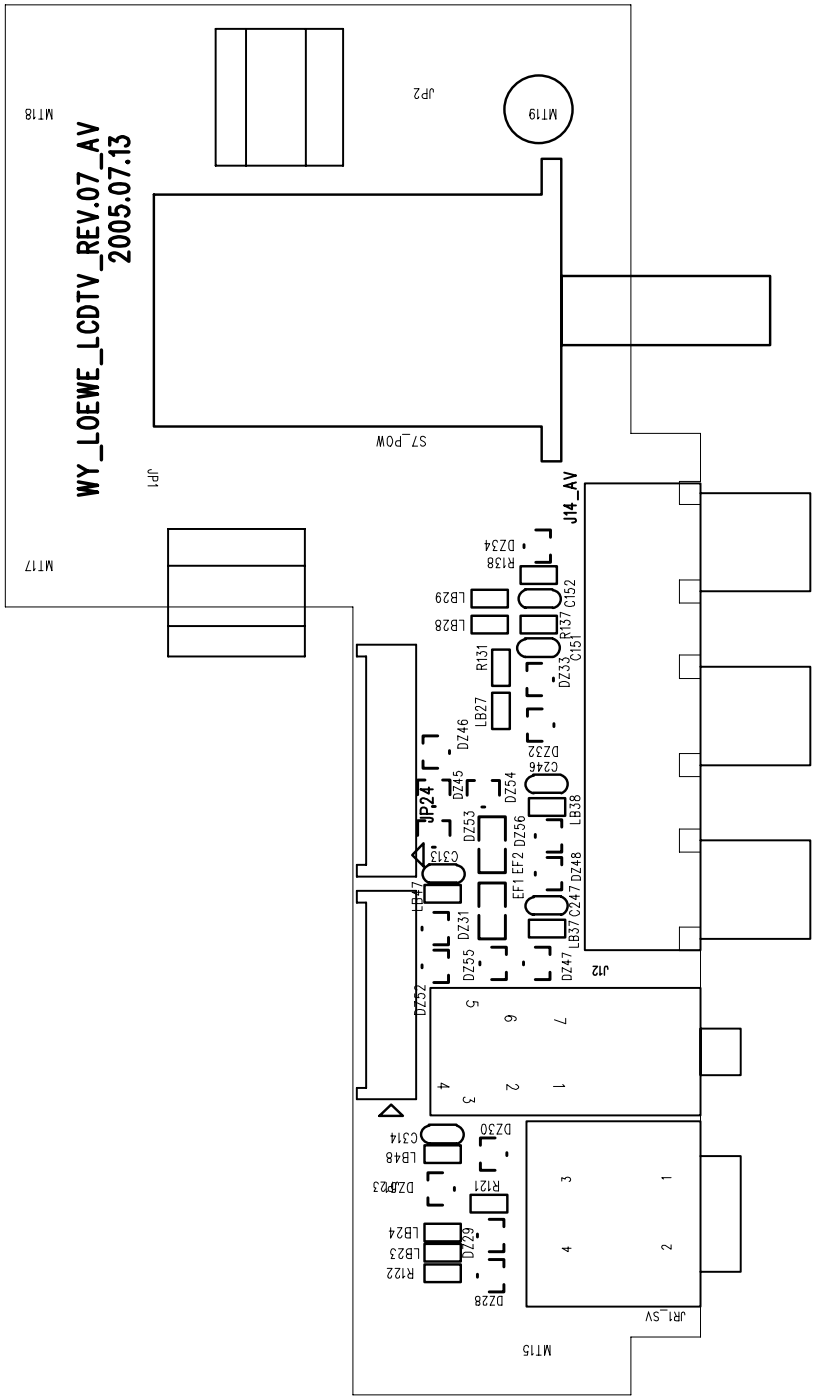

396-89423001 AV-BOARD XELOS 20 / MIMO 20

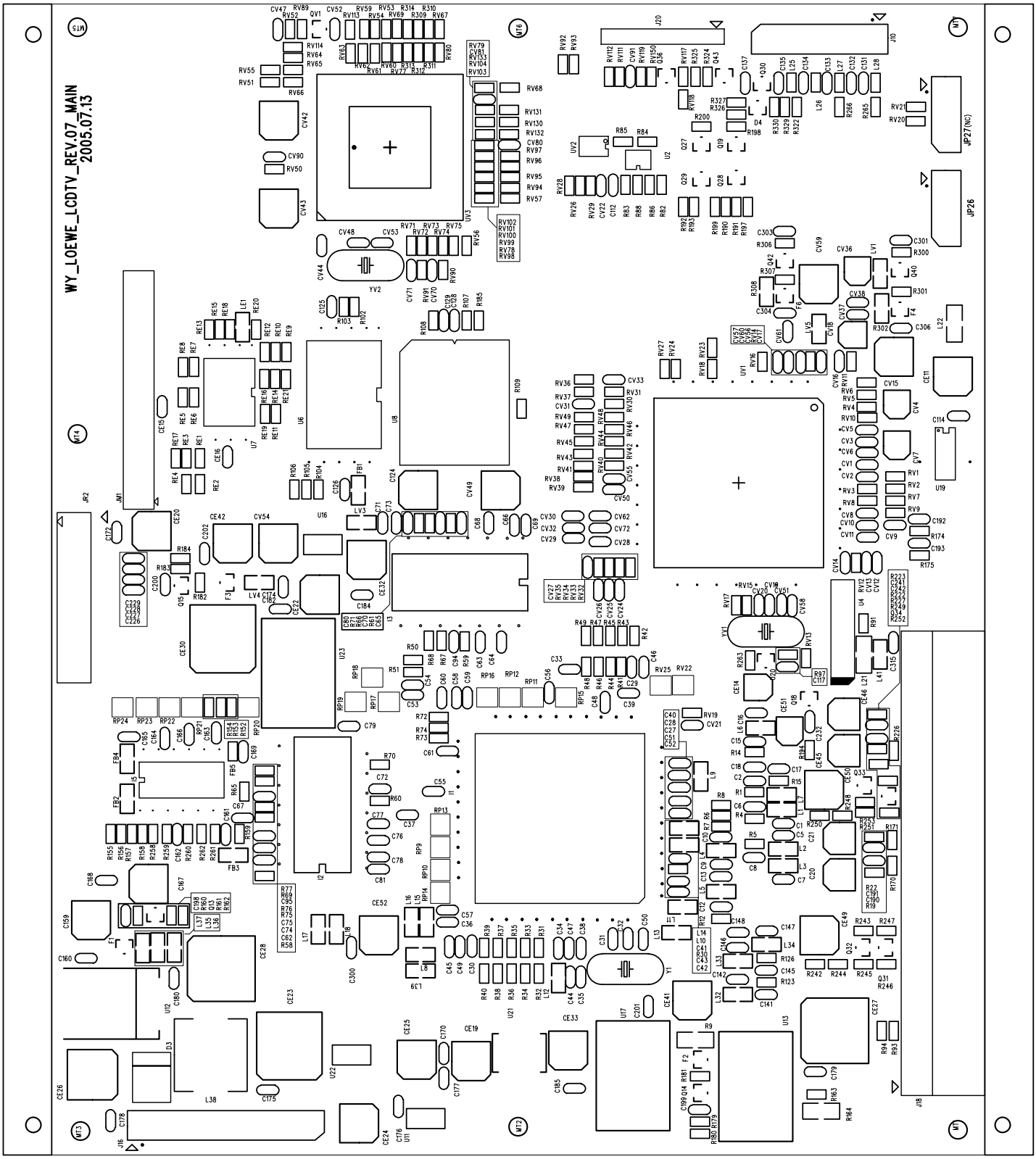

396-89429001 MAINBOARD XELOS 20 / MIMO 20

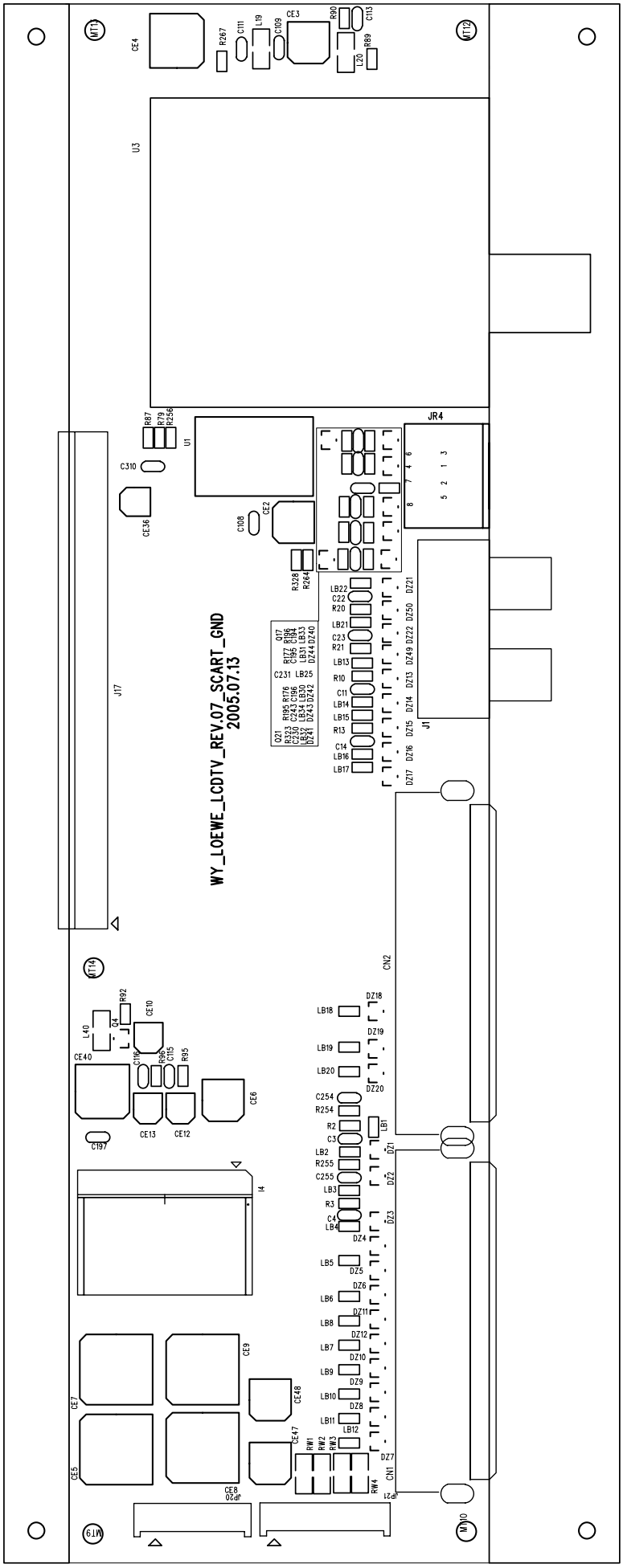

396-89494001 TUNER-BOARD XELOS 20 / MIMO 20

Service Farbfernsehgeräte L2100

Überprüfung des Netzteils

Belegung der Steckers CN101 (zum Signalboard)

Pin	*Belegung*	*Stby.*	*Betrieb*	*Bemerkung*
1	Betriebsspannung	0V	15V	
2	Betriebsspannung	0V	15V	
3	Betriebsspannung	0V	3,3V	
4	Masse			
5	Masse			
6	Inverter ON/OFF	0V	3,3V	Bei abgezogenem Stecker auf 0V
7	Masse			
8	Betriebsspannung	0V	33V	
9	Masse			
10	StBy. Spannung	5V	5V	Spannung muss mit 500mA belastet werden
11	Masse			
12	Netzteil ON/OFF	3,3V	0V	Bei abgezogenem Stecker auf 0V

ACHTUNG: Die StBy. Spannung muss mit ca. 500mA (10Ohm / 10W) belastet werden, damit das Netzteil richtig arbeitet.

Vorschlag für einen Prüfadapter

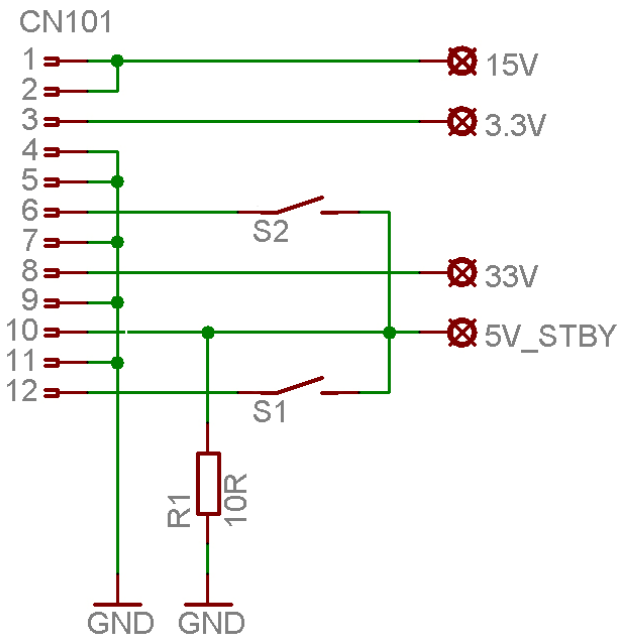

- Wenn S1 geschlossen wird, schaltet das Netzteil in StBy. Betrieb. 15V, 3.3V und 33V sind dann nicht mehr vorhanden.

- Ist S2 geschlossen, so wird der Inverter für die Hintergrundbeleuchtung eingeschaltet.

Der 10 Ohm Widerstand belastet die U5_Stby., damit das Netzteil anlaufen kann. Der Widerstand sollte eine Leistung von 10W haben.

Loewe Opta GmbH
96317 Kronach, Industriestr. 11
96305 Kronach, Postfach 15 54
Telefon (0 92 61) 99-0
Telefax (0 92 61) 99-730
e-mail: loewe@loewe.de
www.loewe.de

Überprüfung der Inverter für die Hintergrundbeleuchtung

Das Chassis L2100 hat keinen Zähler für Lampenfehler. Sobald eine Lampe defekt ist, wird bei diesem Chassis die komplette Ansteuerung der Lampen sofort abgeschaltet. Es ist aus diesem Grund nicht möglich, zu erkennen, welche Lampe defekt ist.

Falls nach dem Einschalten des Gerätes die Hintergrundbeleuchtung nicht startet, aber das LCD-Display trotzdem angesteuert wird (leichte Konturen des Bild sichtbar), dann liegt ein Fehler der Hintergrundbeleuchtung vor. In diesem Fall kann entweder eine Lampe oder ein Inverter defekt sein.

Als erstes sollte geprüft werden, ob das Netzteil ordnungsgemäß arbeitet. Es müssen alle Spannungen anliegen und die ON/OFF Leitung für den Lampen-Inverter auf 3,3V sein.

Jetzt sollte die Schutzschaltung des Inverters umgangen werden. In diesem Fall schaltet der Inverter nicht ab, wenn ein Lampenfehler vorliegt. Um die Schutzschaltung zu deaktivieren müssen die Brücken J35 und J12 auf dem Netzteil verbunden werden (Siehe Abbildung / roter Draht).

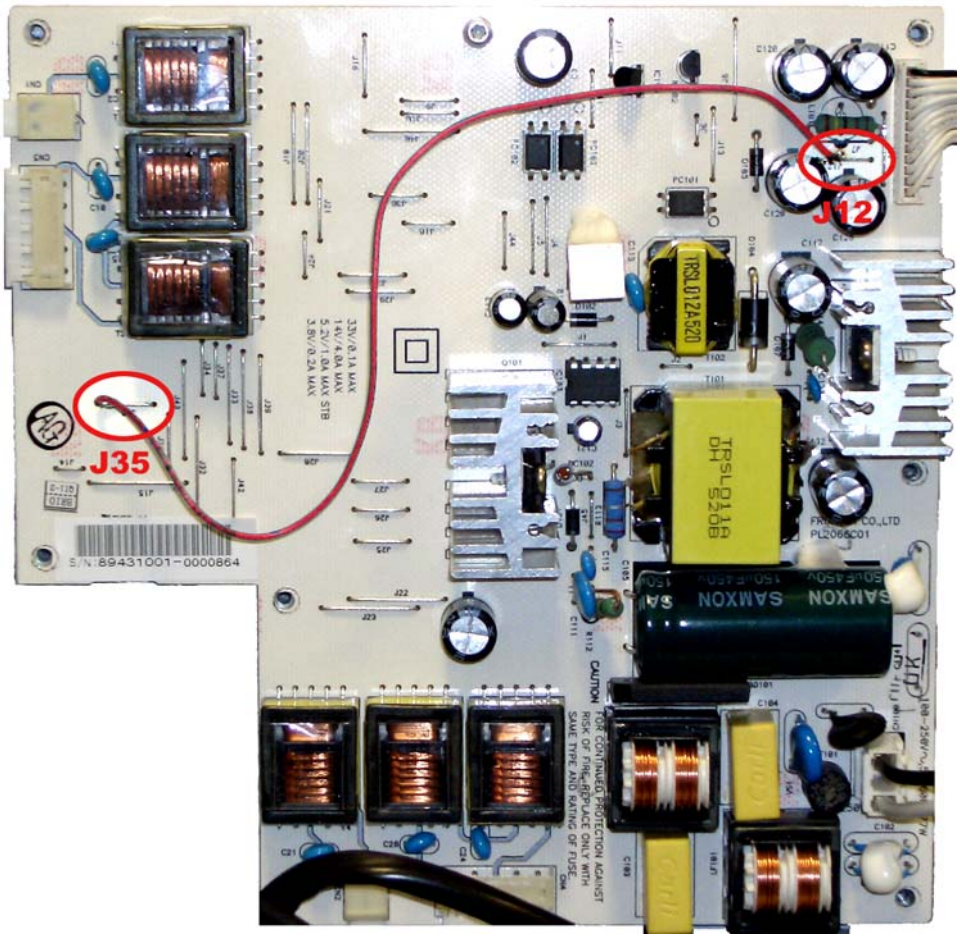

Loewe Opta GmbH
96317 Kronach, Industriestr. 11
96305 Kronach, Postfach 15 54
Telefon (0 92 61) 99-0
Telefax (0 92 61) 99-730
e-mail: loewe@loewe.de
www.loewe.de

Arbeitet die Hintergrundbeleuchtung nach dieser Modifikation wieder, ist entweder eine Lampe oder ein Inverter defekt.

Um die Inverter zu Überprüfen, kann die Ansteuerung an den Wandertrafos gemessen werden. Die Trafos werden symmetrisch angesteuert. An beiden primärseitigen Anschlüssen müssen ca. 18Vss @ 44kHz vorhanden sein. Ist keine Ansteuerung vorhanden, sollten die Ausgänge des Ansteuer-ICs überprüft werden. Hier müssen an den Pins 9, 10, 11 und 12 ca. 6,5Vss anliegen.

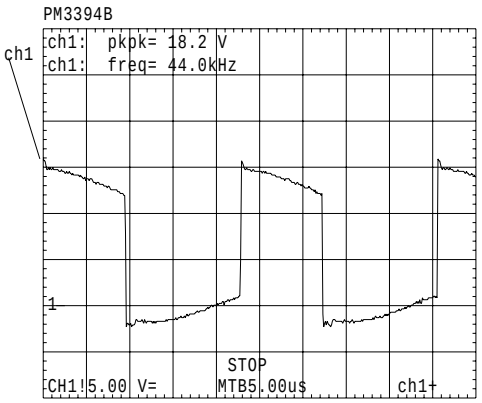

Messung direkt primärseitig am Wandlertrafo

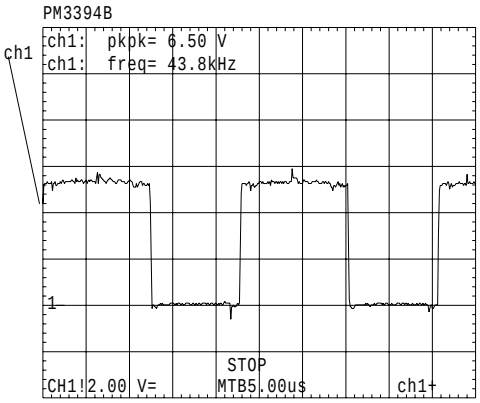

Pin 9, 10, 11, 12 vom BIT3105P

Ist dies nicht der Fall, so ist der Fehler beim Ansteuer-ICs (BIT3105P) oder den Leistungs-MOS-Fets (FDS8958A) zu suchen.

Sekundärseitig von den Wandlertrafos ist es, wegen der hohen Spannungen, schwierig Messungen durch zu führen. Man kann aber Vergleichsmessungen zwischen den einzelnen Wandlertrafos vornehmen. Auf diese Weise kann man einen Windungsschluss eines Trafos ausfindig machen. Man tippt mit dem Tastkopf eines Oszilloskop direkt auf den Ferritkern eines Wandlers. Je nach verwendeten Tastkopf und Eingangswiderstand kann eine Spannung bis ca. 1000Vss gemessen werden. Diese Spannung kann man nun mir der von den anderen Wandlertrafos vergleichen und so den defekten Trafo lokalisieren.

Loewe Opta GmbH
96317 Kronach, Industriestr. 11
96305 Kronach, Postfach 15 54
Telefon (0 92 61) 99-0
Telefax (0 92 61) 99-730
e-mail: loewe@loewe.de
www.loewe.de

Service colour TV set L2100

Check of the power supply unit

Pinning of the connector CN101 (to Signalboard)

Pin	*Function*	*Stby.*	*ON*	*Comment*
1	Supply voltage	0V	15V	
2	Supply voltage	0V	15V	
3	Supply voltage	0V	3,3V	
4	Ground			
5	Ground			
6	Inverter ON/OFF	0V	3,3V	When unplugged this one is on 0V
7	Ground			
8	Supply voltage	0V	33V	
9	Ground			
10	Standby. voltage	5V	5V	Has to have a load of 500mA
11	Ground			
12	Power supply ON/OFF	3,3V	0V	When unplugged this one is on 0V

ATTENTION: The Standby voltage has to have a load of about 500mA (10Ohms / 10W) to have the PSU work correct.

Proposal for a test adaptor

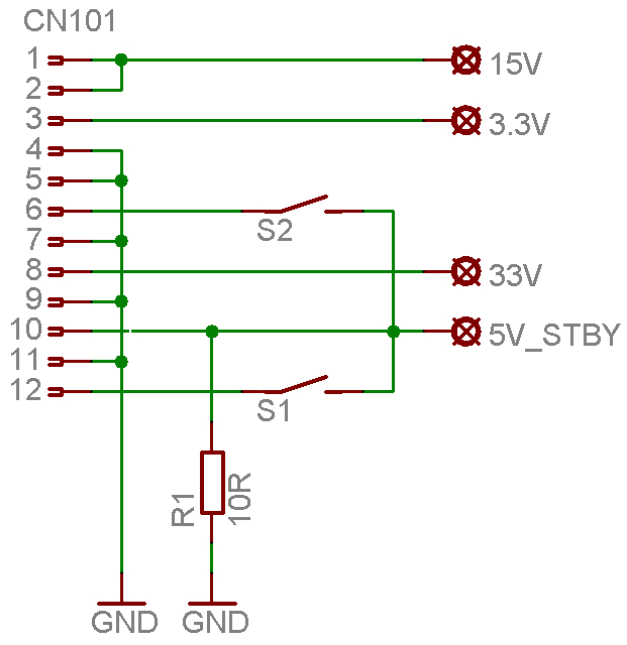

- If S1 is closed the PSU goes in standby mode. 15V, 3.3V and 33V are no longer available.

- If S2 is closed the inverter for back-lights is switched on.

The 10 Ohm resistor is the load for the U5_Standby, to have the PSU running. This resistor should be able to handle 10W.

Test of the inverter and backlights

The chassis L2100 does not have any counter for backlight errors. As soon as a lamp is faulty the electronic switches off the complete controlling for the backlights. Because of that you are not able to determine which lamp is faulty.

If after switch on the backlight does not start but the LCD-Panel control works (you can see slight contours in the picture) there is a fault in the backlight circuit. In this case a lamp or the inverter can be faulty.

First you should check that the PSU works ok. You have to have all voltages available and the ON/OFF for the backlight inverters have to be on 3.3V.

Now you can bypass the protection circuit for the backlights. In this case the backlights do not switch off anymore in case of a faulty lamp. To deactivate the protection circuit you have to put a bridge between J35 and J12 on the PSU (see red wire in the picture below).

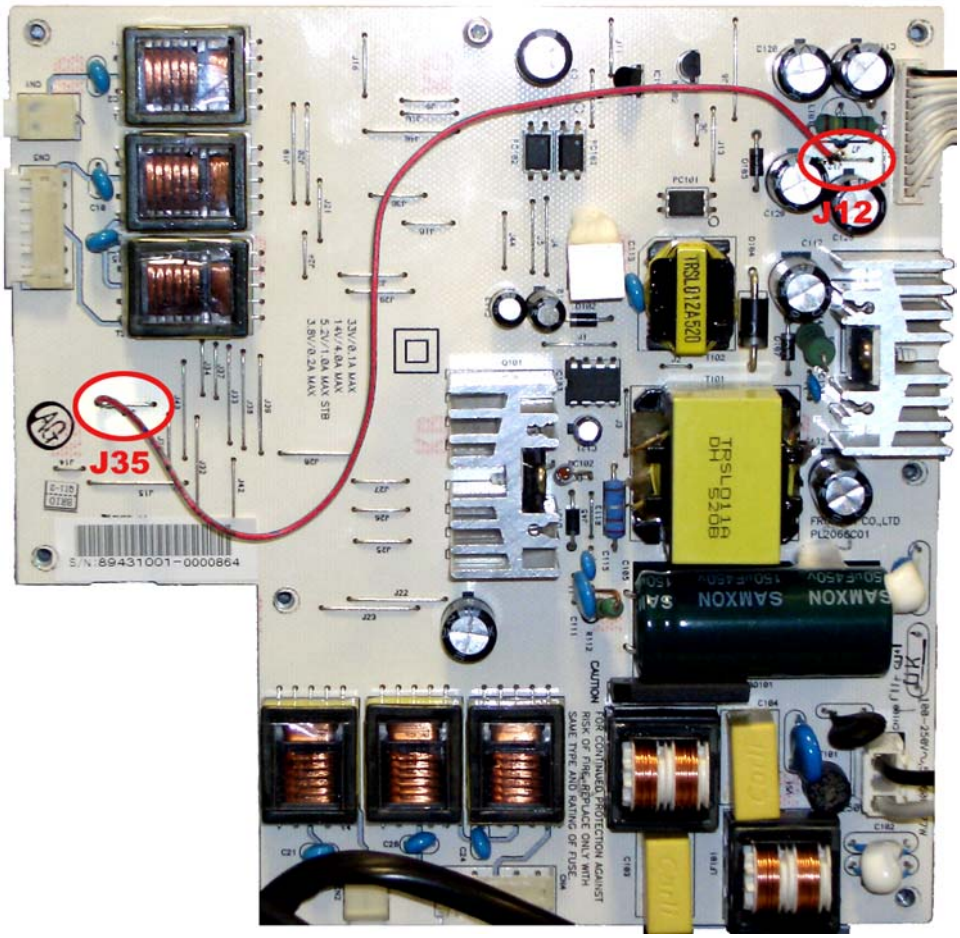

If the backlights will work again after this modification either one lamp or a inverter is faulty.

To check the inverter circuit the control of the transformer should be checked. The transformers are drive symmetrically. On both primary connectors you have to have approx. 18Vss with 44 kHz. If there is no control you should check the output of the driver IC. On that one you should have approx. 6.5Vss on the pins 9, 10, 11 and 12.

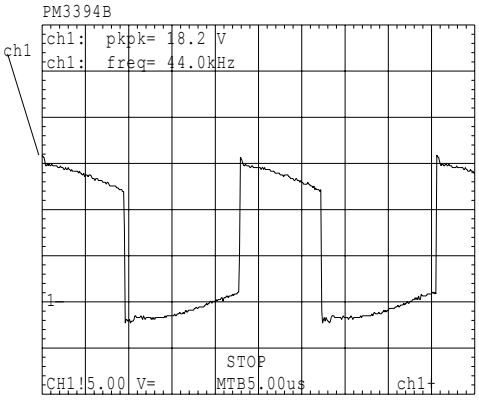

Primary side of transformer

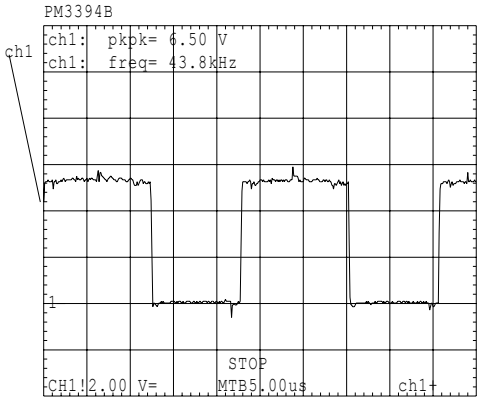

Pin 9, 10, 11, 12 of BIT3105P

In case there is no output voltage from the IC, either this one (BIT3105P) or the power MOS-Fets (FDS8958A) should be faulty.

On the secondary side of the transformers it is difficult to measure because of the high voltage. But you can compare the measures of the single transformers, to see if there is a short circuit inside one of them for example. Therefore you should bring the needle of the scope directly on the ferrite core of the transformer, depending on the used probe and the resistance you can measure a voltage up to approx. 1000Vss, this one can be compared with the other ones now to determine the defect one.